Threshold Detection of Radar Targets Pulse Integration L-3B (Rev-X)

EEE-5557 Intro to Radar

POMR Chap-3 & 15

Sections 3.3.8, 15.2 & 15.5.8

Supplemental Ref: Intro Radar Systems by Skolnik 3rd ed – Chap-2

Lecture Objective

- Last lecture, we reviewed the detection of a non-fluctuating radar echo in the presence of gaussian noise <u>for a single pulse</u>
- Today, we analyze the detection of a non-fluctuating radar echo in the presence of gaussian noise <u>for multiple pulses</u>
  - Introduction to the concept of pulse integration
  - To learn to calculate the required target (echo) signal-to-noise power ratio as a function of :
    - the probability of radar target detection
    - the probability of false alarm (avg time between FA, <Tfa>)
    - the # pulses integrated

Last Lecture: Single Pulse Prob of Detection for Echo plus Gaussian Noise

- Albersheim (1980) developed a simple empirical formula for Rice's integral relationship for the <u>single-pulse</u> P_d as a function of *S/N*, P_d and P_{fa}, which is

$$S/N = A + 0.12\,AB + 1.7B \quad \text{, power ratio}$$

where

$$A = \ln[0.62/P_{fa}] \quad \text{and} \quad B = \ln[P_d/(1-P_d)]$$

This formula calculates the required *S/N* for a <u>single</u> radar pulse to yield a desired P_d given a specified $\langle T_{fa} \rangle$ or (P_{fa})

Note: Albersheim's equation is Skolnik's equation (2.30)

S/N for Single Pulse = No Pulse Integration

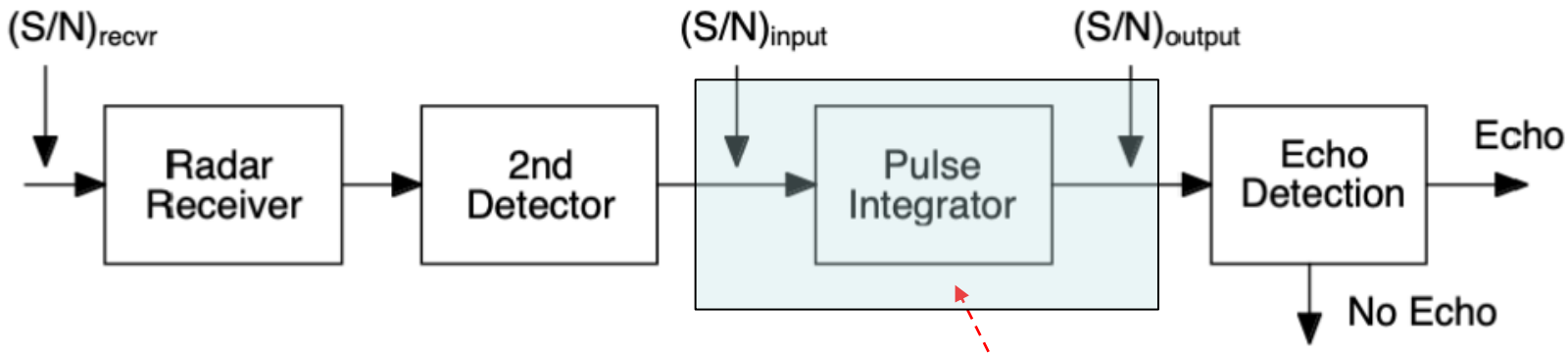

The receiver is linear; so the

$$(S/N)_{recvr} = (S/N)_{input}$$

and for a single pulse the **<u>gain of the pulse integrator = 1</u>**

Therefore,

$$(S/N)_{recvr} = (S/N)_{input} = (S/N)_{output}$$

S/N for Single Pulse = No Pulse Integration

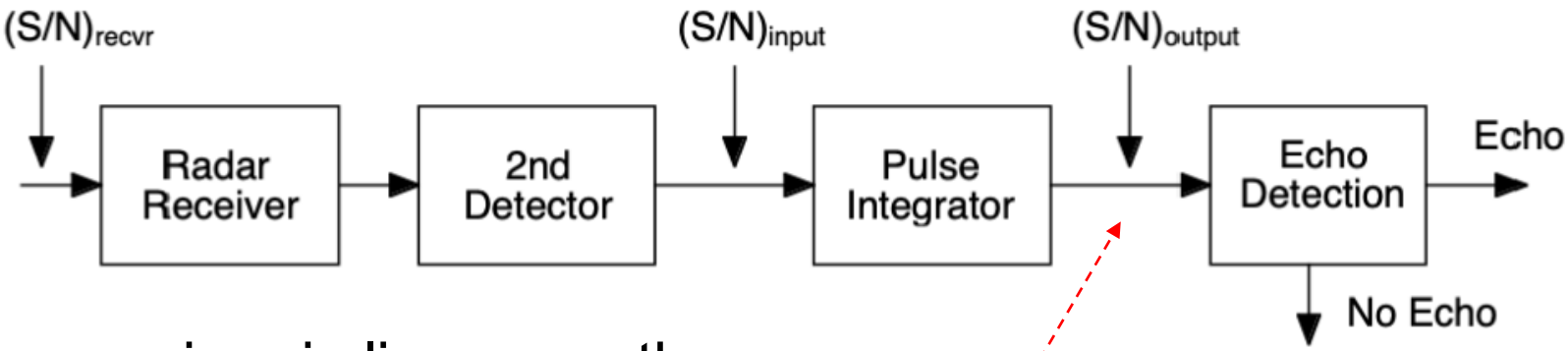

The receiver is linear; so the

$$(S/N)_{recvr} = (S/N)_{input} = (S/N)_{output}$$

and the value of S/N required to yield a desired P_d (given an acceptable P_{fa}) is given by Albersheim's formula

$$S/N = A + 0.12\,AB + 1.7B \quad , \textit{power ratio}$$

At the input to the threshold detection circuit

Detection Strategies for Multiple Measurements

POMR Section 15.2

Dwells and Coherent Processing Intervals

- An individual target will be within the radar antenna beam for a period of time, called the ***dwell time*** or simply ”time-on-target” (*TOT*)
  - The #pulses on target (POT) = time-on-target * PRF
  - Data within the dwell time may be organized into one or more coherent processing intervals (**CPI**)
- In chap-3, we learned that the prob of detection $\boldsymbol{P_d}$ is improved when the S/N is increased <u>before</u> the threshold detection process
  - Also, target detection takes place within each range bin

Pulse Integration

- Target echo pulses are a short time duration of sine wave (carrier)
  - Pulse width = τ sec (typically microsec)
  - However, the number of cycles of the sinusoidal carrier is large 1,000's - 10,000's
- Pulse integration is the vector sum of radar echos (sine waves)
- Therefore, this requires that we consider both the amplitude and phase of the echo signal

Pulsed Radar Echo Electric Field Signal

$A(t)\cos(\omega t + \theta(t))$

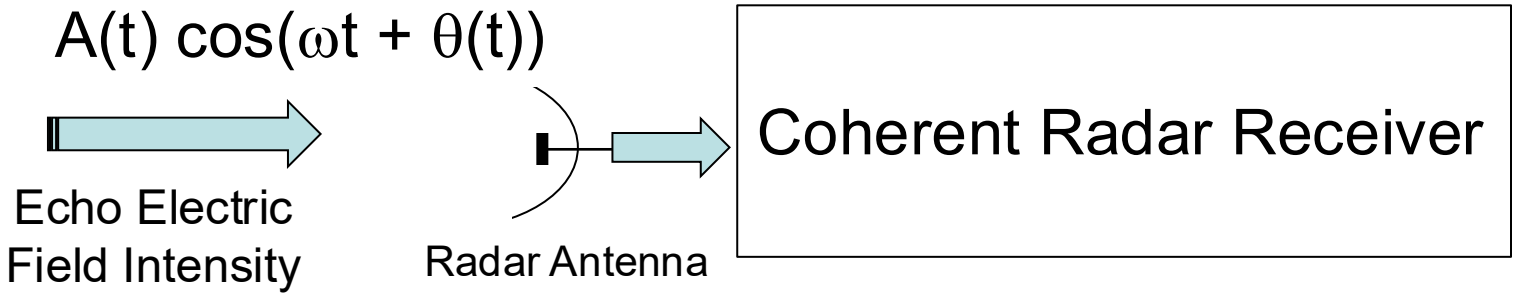

Radar Equation

where

$A(t) = sqrt(\ 2*P_r(t)\ )$, peak voltage

and

$\theta = modulo_{360}\{\ (2*R(t)/\lambda)*360\ ^{\circ}\ \}$, *phase*

Round-trip phase

Coherent In-phase & Quadrature-phase Demod

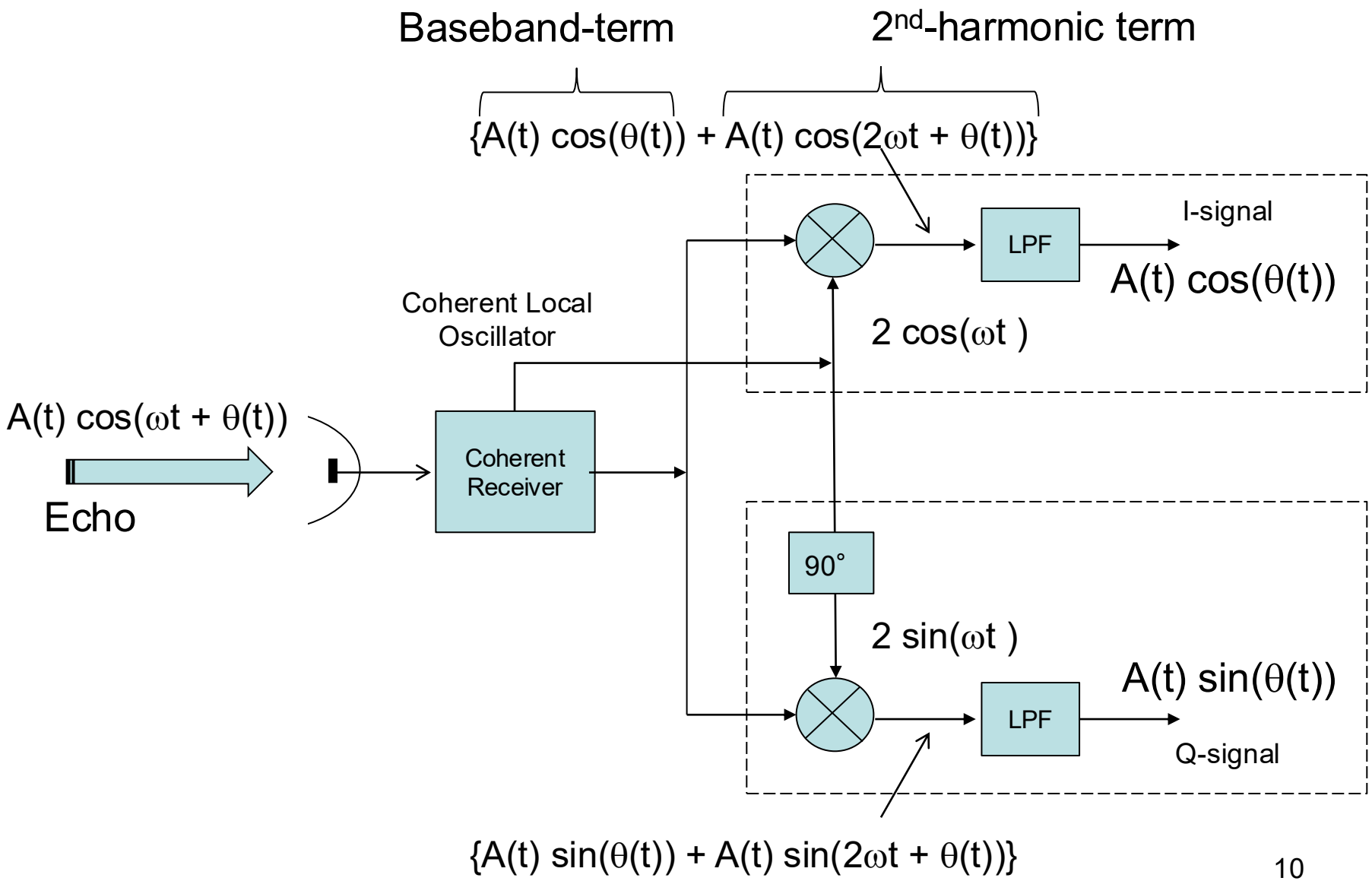

Echo Amplitude & Phase

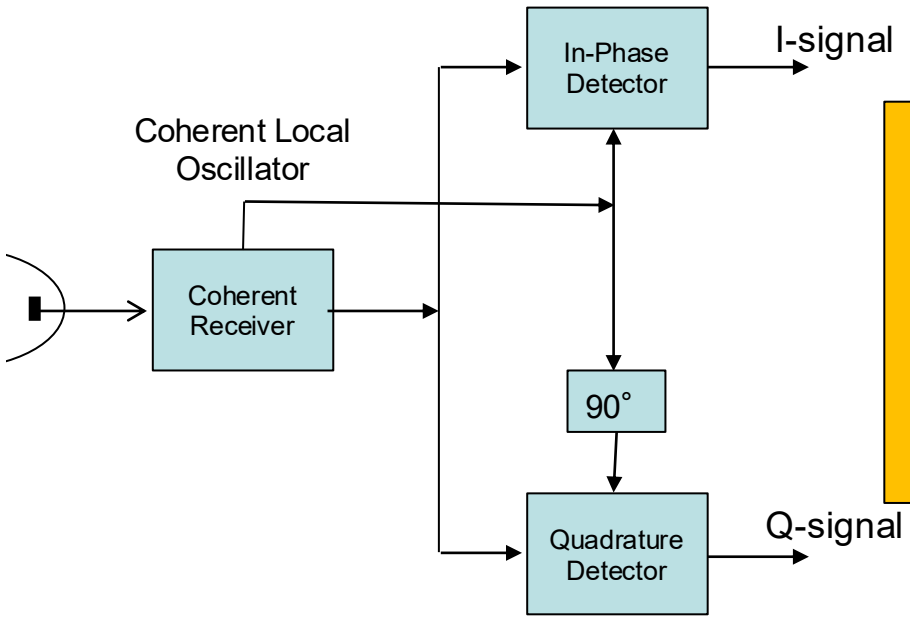

$$A = \sqrt{I^2 + Q^2}$$

$$\theta = arcTan\left({}^{Q}/_{I}\right)$$

- Create a complex baseband signal: $y(t) = I(t) + jQ(t)$

$$y(t) = A(t)\,\{\cos(\theta(t)) + j\,\sin(\theta(t))\} = \underbrace{A(t)\,e^{j\theta(t)}}_{\text{Complex Phasor}}$$

Radar Signal Processor
(Example: 31 Range Gates processed in parallel)

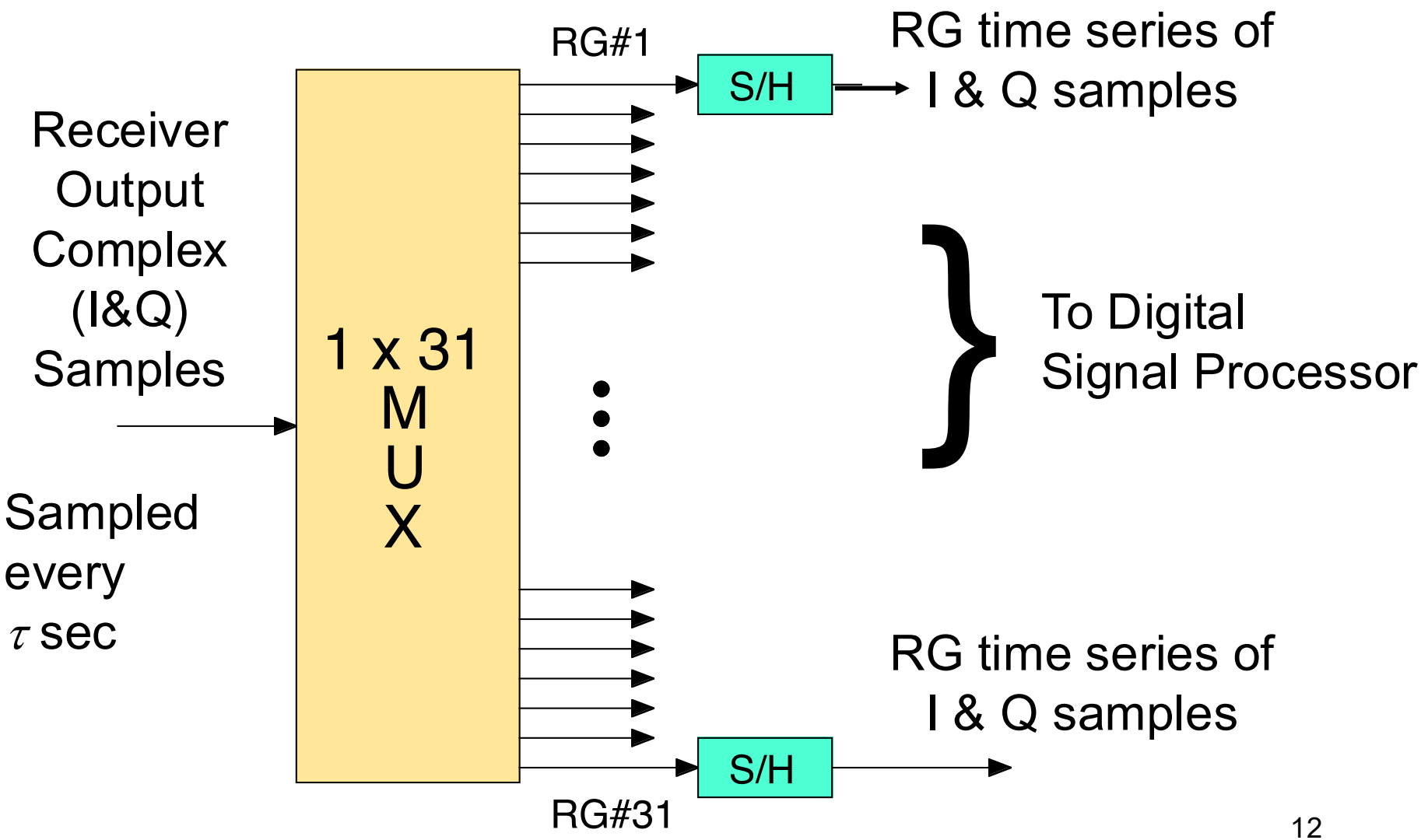

Pulsed Radar Data Acquisition (POMR Fig 17-1)

- Measurement and processing of coherent data in a pulsed radar begins with the fast time/slow time (range/pulse number) matrix y[l, m] of coherent, complex baseband data

- Each row of the matrix represents a time series of radar meas @ a fixed range bin over *"M"* successive pulses
- The total amount of time *MT* is called the coherent processing interval (*CPI*)

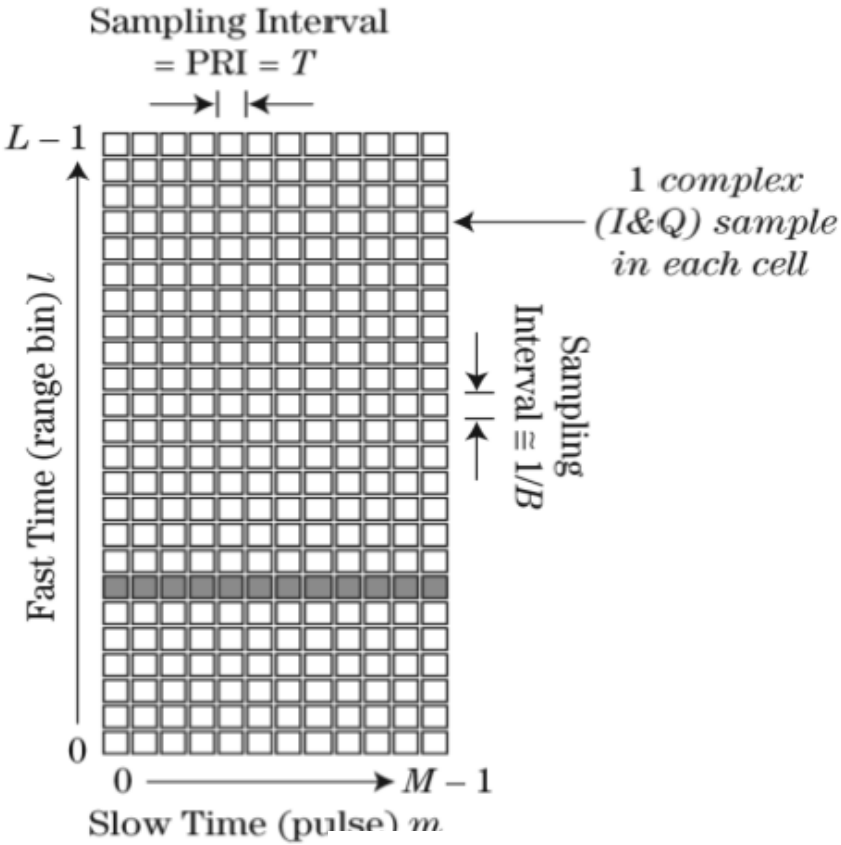

Example: CPI of Fast-time/slow-time data (POMR Fig 15-1)

- One CPI is the shaded region of echo samples for the 4th range bin

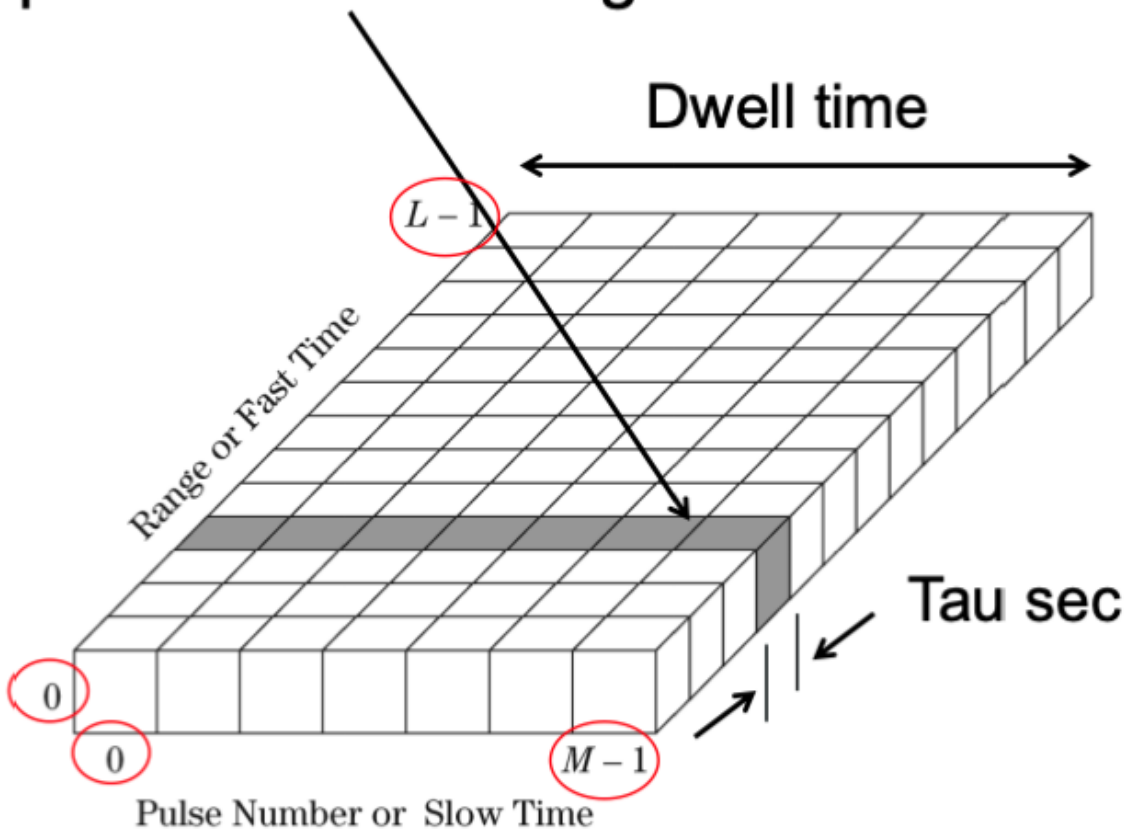

Note: IDL format for matrix row & column #'s

Coherent Pulse Integration (Pulse Vectoral Addition)

Coherent (Pre-detection) Pulse Integration

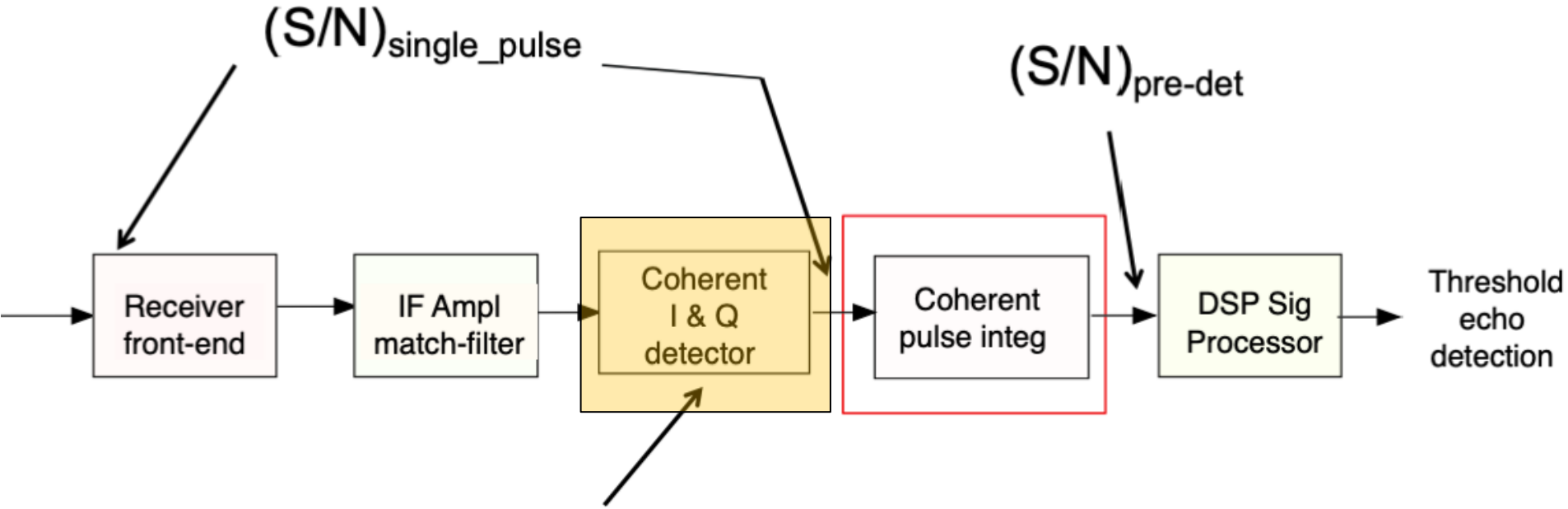

- Coherent pulse integration requires coherent demodulation to baseband complex-values (I and Q channels)

Coherent (Pre-detection) Pulse Integration

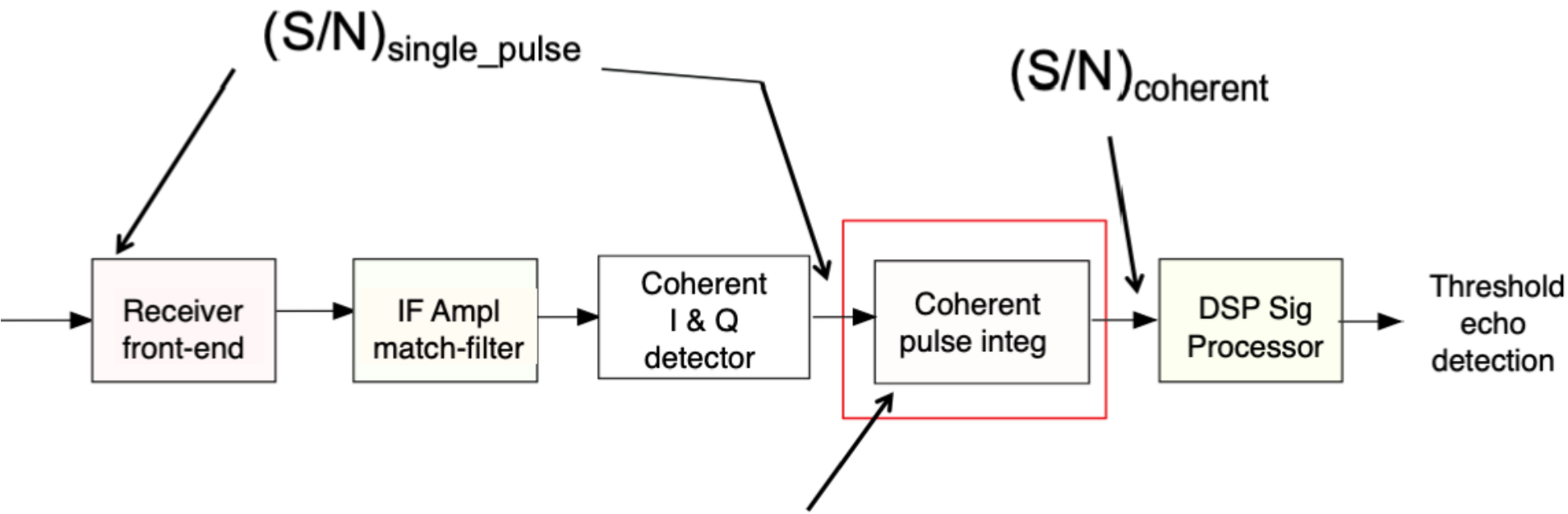

- RF pulses (phasors) are coherently added (vectorially) prior to detection (in DSP signal processor)
    - Both pulse amplitude and phase are required for coherent (voltage addition)

Analog Equivalent of Coherent Pulse Integration in Range Bins

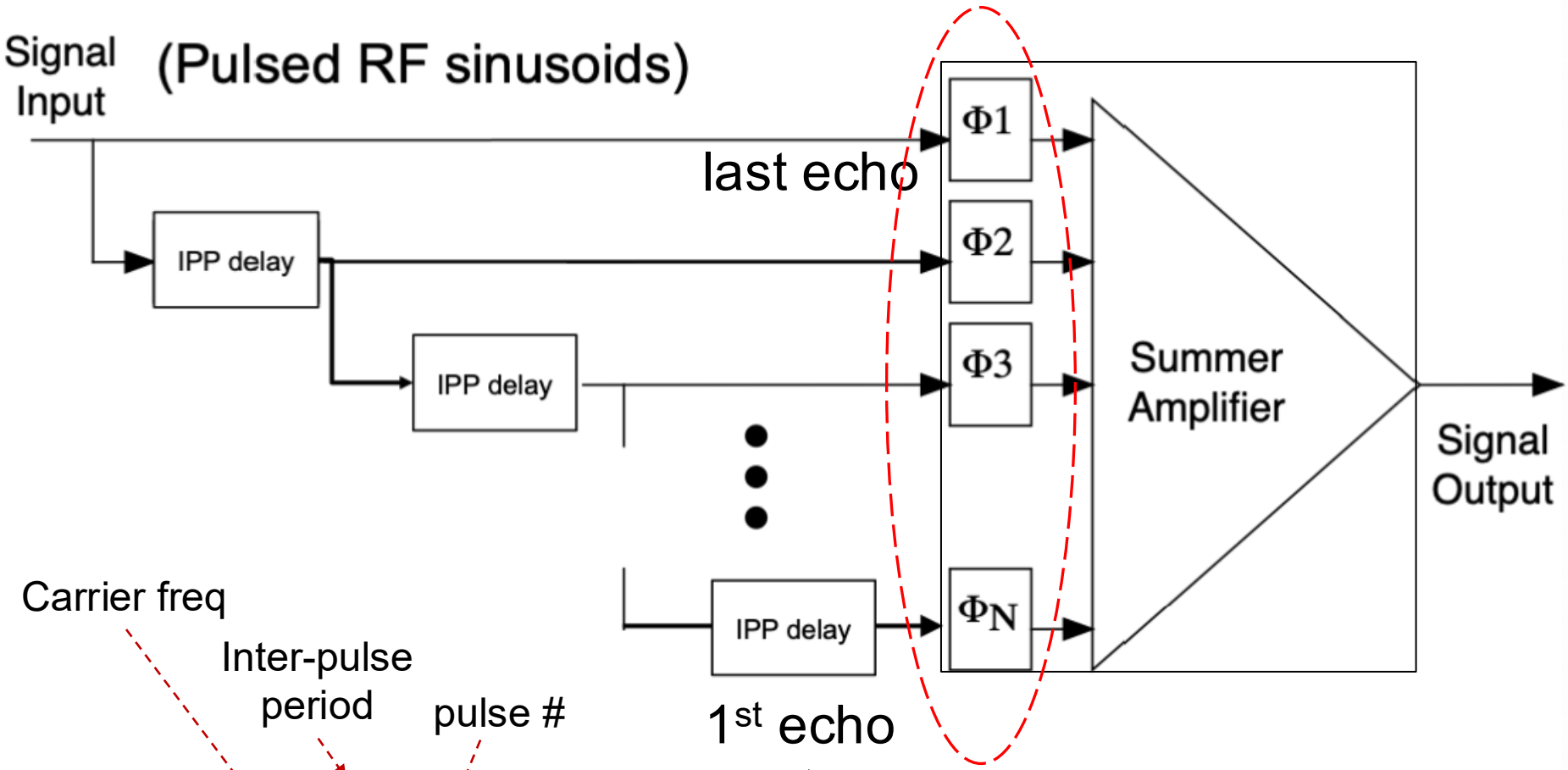

Carrier freq

Inter-pulse period

pulse #

$$e^{-j\omega_c * IPP * n} = e^{j\Phi_n}$$

Phase adjustment to align sinusoids

Ideal Coherent (pre-detection) Integration of Multiple Radar Pulses

- Assuming 100% efficiency in adjusting the echo phases, the resulting SNR after integrating "n"-pulses is:

$$(S/N)_{coherent} = n * (S/N)_{single\ pulse} \qquad (1)$$

S/N output of Coherent pulse integ

S/N input (each pulse)

Issues with Coherent Pulse Integration

- For complex targets, the echo electric field is the vector sum of several scattering centers at different ranges, which change on a pulse-by-pulse basis
  - As a result, the echo will fluctuate in amplitude and have a random (unknown) phase
- Even for a sphere (single scatter center), if either (the radar or target) are in motion, then the range will change in an unknown manner on a pulse-by-pulse basis
  - Often, the echo phase weights $exp(j\phi_n)$ cannot be reliably chosen to compensate for the phase of the data samples (echos) so that they add in-phase

Non-coherent Pulse Integration (Pulse Scalar Addition)

Skolnik: Intro to radar Systems 3rd Edition Chap-2

Radar Non-Coherent (Post-detection) Pulse Integration

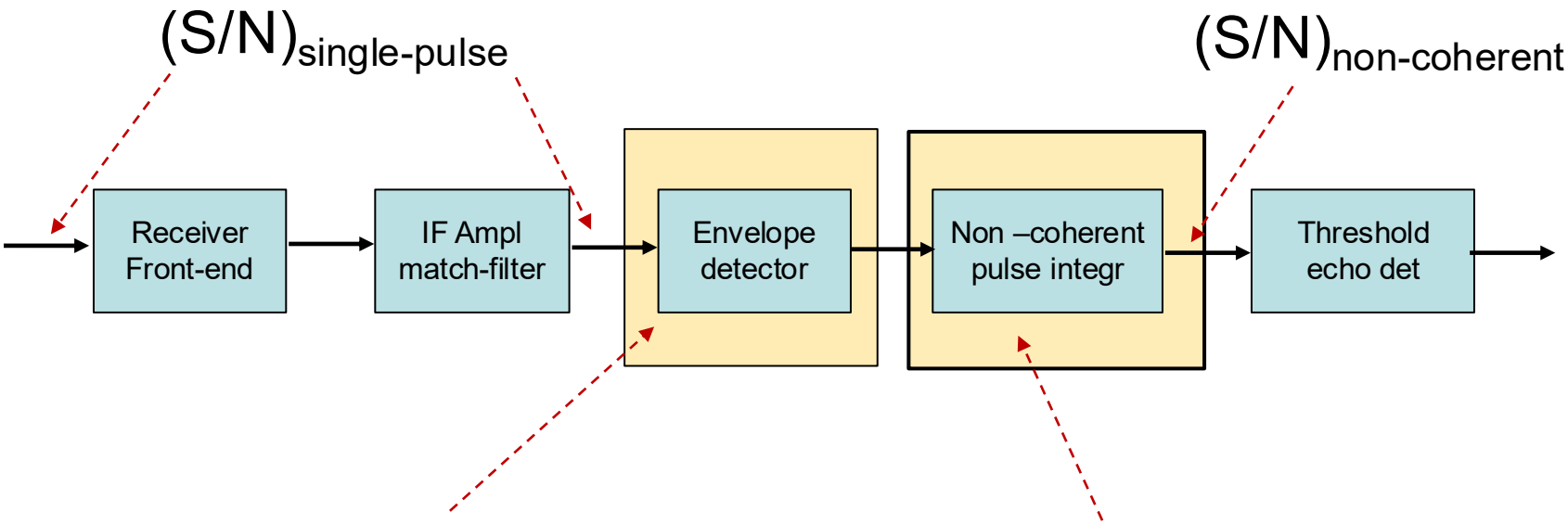

Coherent detector replaced by envelope detector – (lost phase information)

Coherent pulse integrator replaced by non-coherent pulse integrator

Practical Non-Coherent (post-detection) Integration of Multiple Radar Pulses

- For non-coherent integ. efficiency $E_i(n) < 100\%$, the resulting SNR after integrating "n"-pulses is:

$$(S/N)_{non\text{-}coher} = [n * E_i(n)] * (S/N)_{input\ (single\ pulse)}$$

$$= n_{eq} * (S/N)_{input\ (single\ pulse)} \qquad (2)$$

  - where $[n * E_i(n)]$ is the <u>integration improvement factor</u> also known as the <u>equivalent number of pulses</u> (n_{eq}) that are coherently integrated (with 100% efficiency)
  - Note that n_{eq} is a non-integer (real #) value

Non-Coherent Pulse Integration
Skolnik Section 2.6

- The improvement in the output S/N is very difficult to analyse
  - is a function of (P_d, P_{fa} & # pulses integrated)
- In 1954, J. I. Marcum published his results, which are presented in Skolnik Fig. 2.7 p-47
- The efficiency for non-coherent integration is << that for coherent integration
  - Unfortunately, the echo phase history is not generally known; so non-coherent integration is typical

Skolnik Fig 2.7 (a) Non-coherent Pulse Integration Improvement Factor = $nE_i(n)$

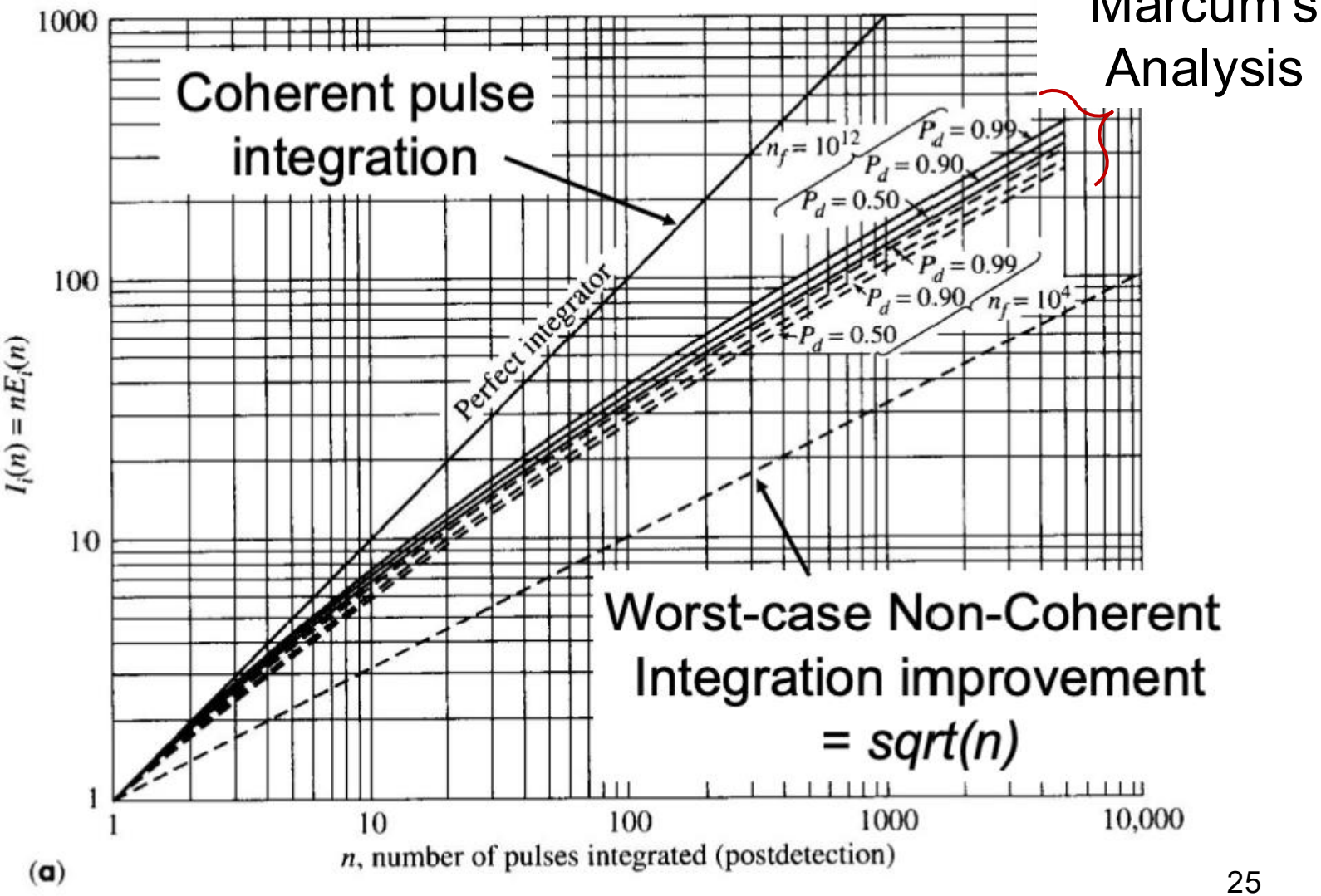

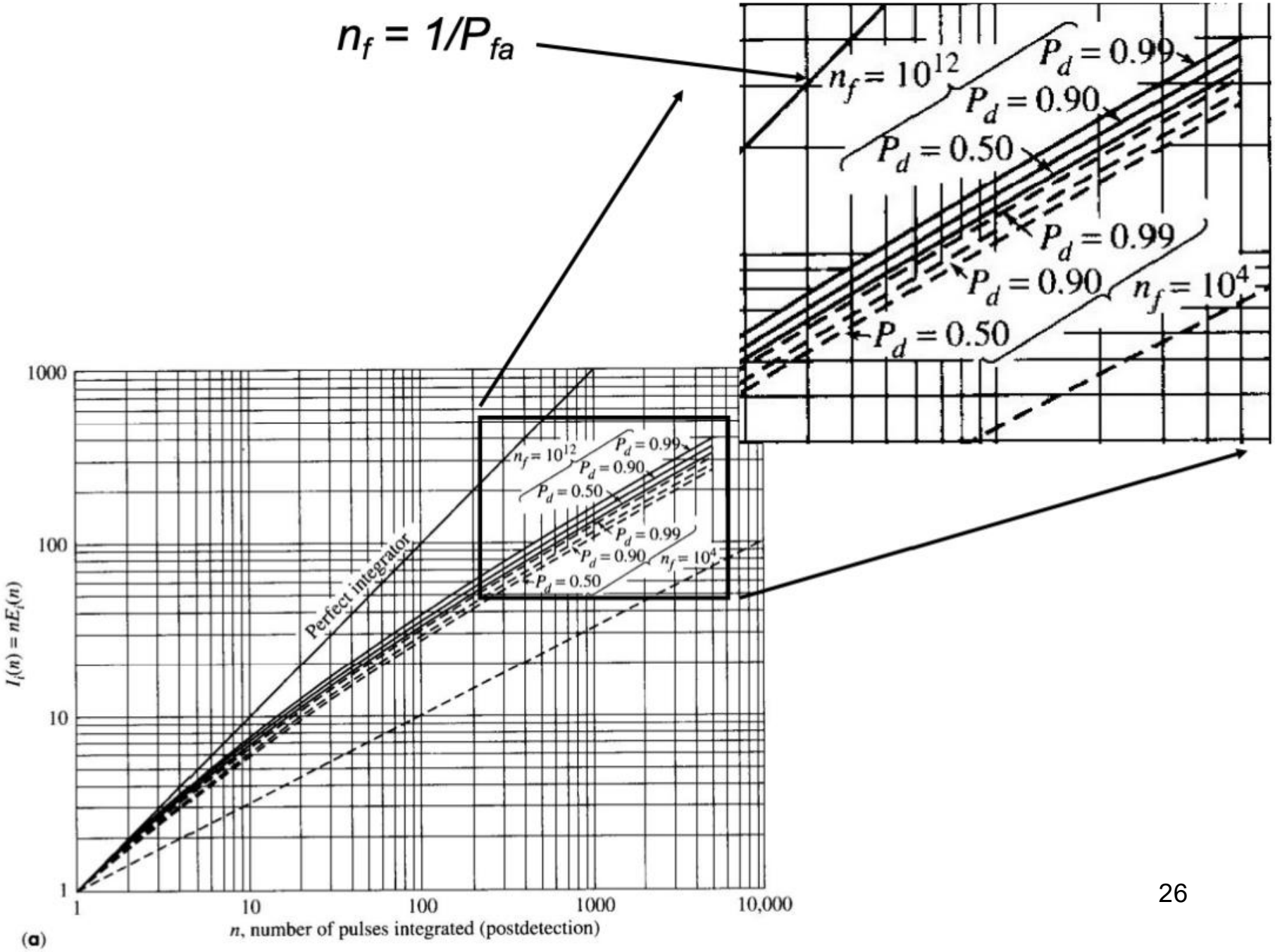
$n_f = 1/P_{fa}$
$n_f = 10^{12}$
$P_d = 0.99$
$P_d = 0.90$
$P_d = 0.50$
$P_d = 0.99$
$P_d = 0.90$
$n_f = 10^4$
$P_d = 0.50$
Perfect integrator
$I_i(n) = nE_i(n)$
1000
100
10
1
1
10
100
1000
10,000
n, number of pulses integrated (postdetection)
(a)

Skolnik Fig 2.7 (b) Non-coherent Pulse Integration Loss (note: positive dB)

$L_i(n) = 10*\log(1/E_i(n))$

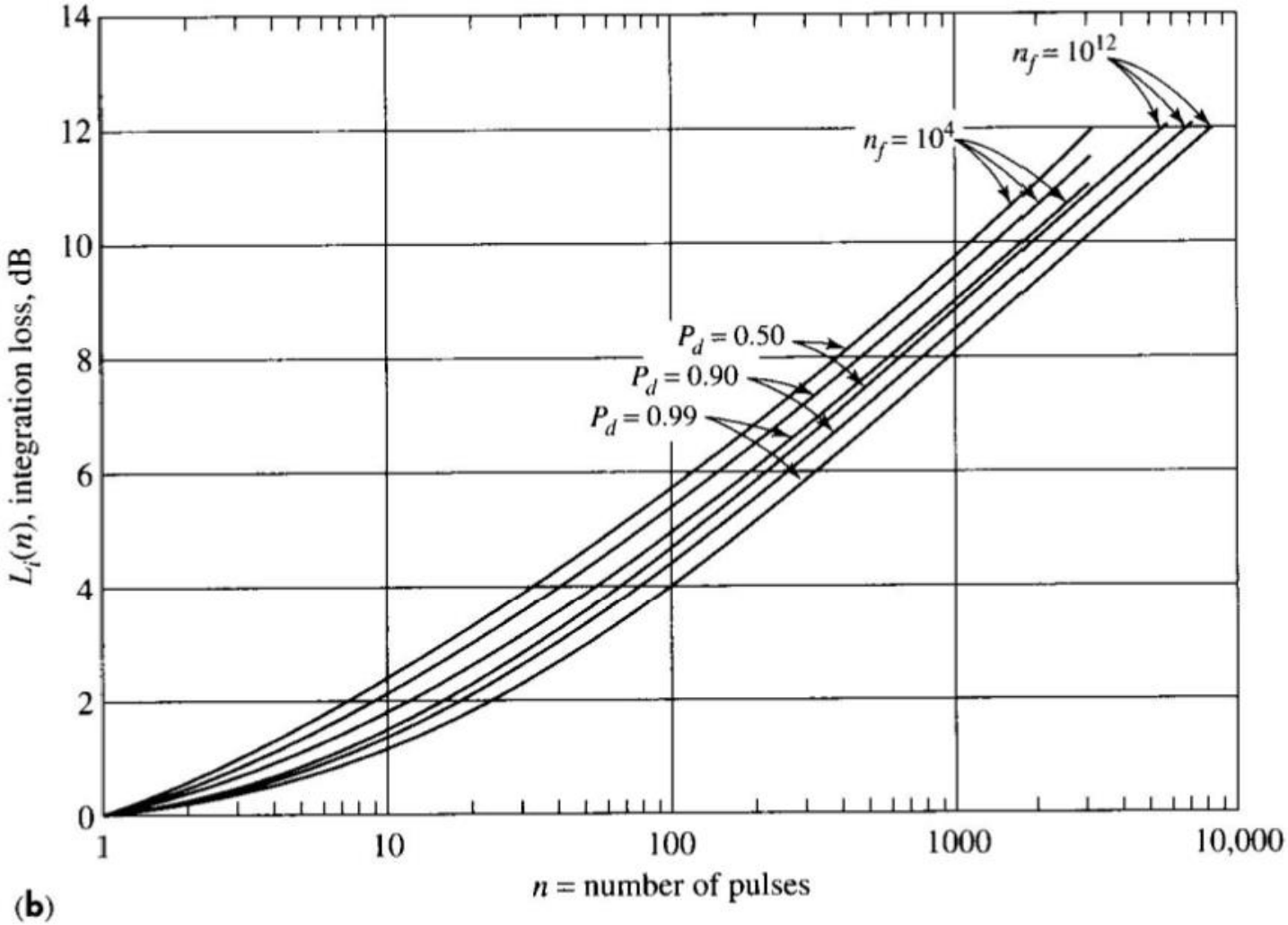

S/N for Single Pulse with Non-coherent Pulse Integration

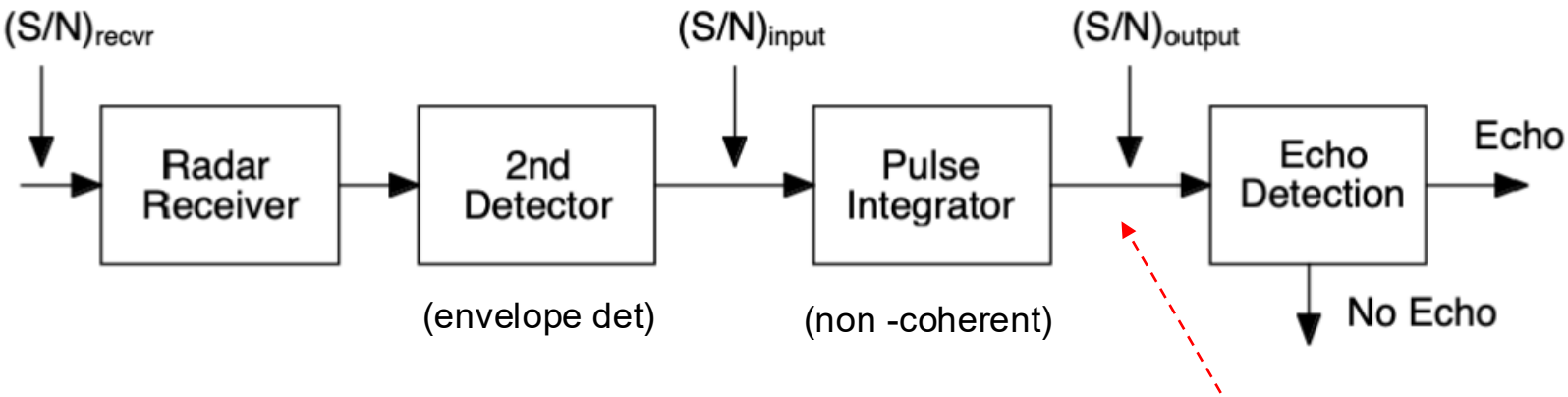

For a single pulse, the pulse integrator gain = 1; so:

$(S/N)_{recvr} = (S/N)_{input} = (S/N)_{output} =$

Albersheim's single-pulse formula

$$S/N = A + 0.12\,AB + 1.7B \quad , ratio$$

$(S/N)_{input}$ for multiple pulses with Non-coherent Pulse Integration

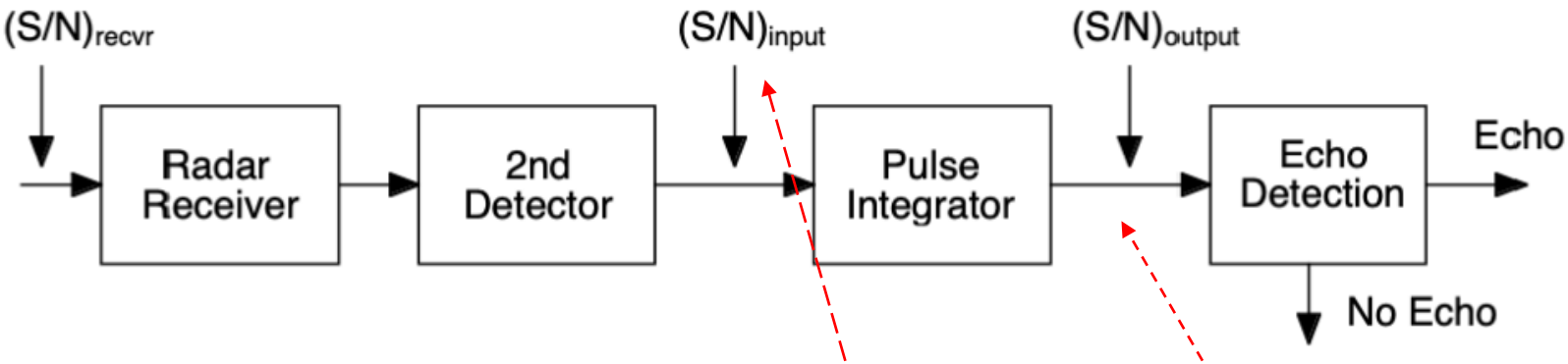

Albersheim's single-pulse formula

$$S/N = A + 0.12\,AB + 1.7B \quad , ratio$$

Now we must calculate: what is the $(S/N)_{input}$ that yields the required $(S/N)_{output}$?

For non-coherent integ:

$$(S/N)_{output} = [n * E_i(n)] * (S/N)_{input}$$

Skolnik p-46 2nd pp:

- Solving for the non-coherent integration efficiency is:

$$E_i(n) = (S/N)_{output} / [n * (S/N)_{input\ (single\ pulse)}] \qquad (2.32)$$

  - where $(S/N)_{output}$ is the "improved" SNR that results after post-detection integration of "n" pulses
    - Also, this is the value of SNR that is required to yield a given P_d and P_{fa} using equat-2.30 (or equat-2.35 with n = 1 pulse)
  - and $(S/N)_{input\ (single\ pulse)}$ is the (input) required SNR per pulse when there are "n" pulses integrated post-detection
    - This is the value of SNR that is required to yield a given P_d and P_{fa} using (2.35) with "n" pulses integrated
    - Also, this is the $\boldsymbol{(S/N)_{min}}$ which must be substituted into the radar range equation

Non-coherent Integration Improvement - Empirical Albersheim's Formula

- An empirical formula that matches Fig. 2.7 was also developed by Albersheim
- This is a multi-pulse equivalent to Skolnik equat. 2.30 (single pulse)
  - Find $S/N = f(P_d, P_{fa} \,\&\, n)$

$$(S/N)_{input} = -5\log_{10} n + \left(6.2 + \frac{4.54}{\sqrt{n+0.44}}\right) * \log_{10}\left(A + 0.12AB + 1.7B\right)$$

units = dB

Skolnik (2.35)

Also given as **POMR (3.17) p-107**

Understanding Albersheim's Formula

$$= 10 * \log_{10}(1/\sqrt{n})$$

$$\overset{dB}{(S/N)_{input}} = -5\log_{10} n + \left(6.2 + \frac{4.54}{\sqrt{n+0.44}}\right) * \log_{10}(A + 0.12AB + 1.7B)$$

Albersheim formula (Single-pulse), units pwr ratio where

$A = ln[\ 0.62/P_{fa}\ ]$ and $B = ln[P_d/(1\text{-}P_d)]$

S/N for non-Coherent Pulse Integration

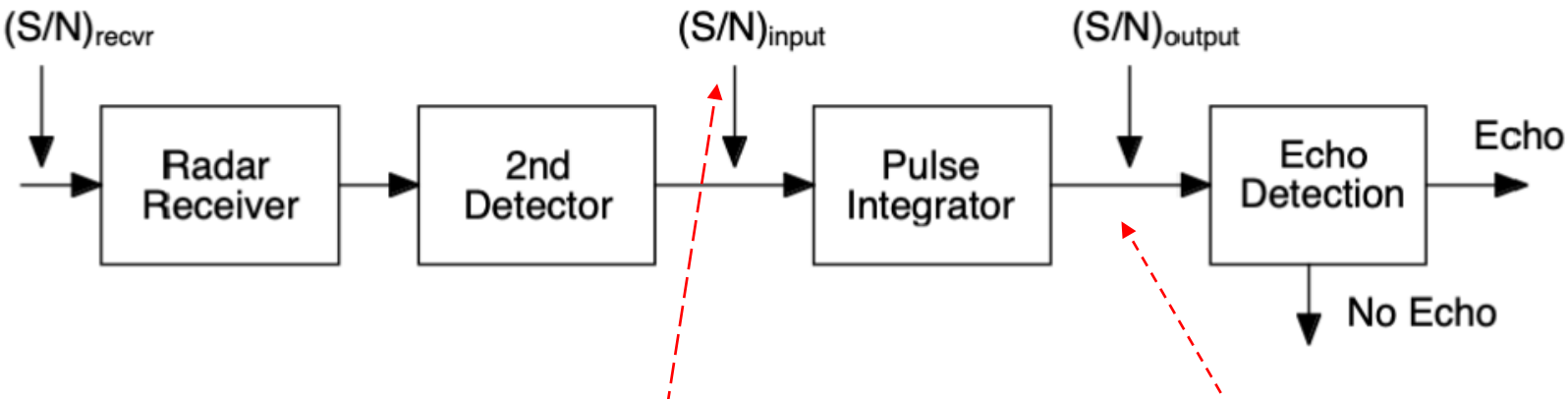

Albersheim's single-pulse formula

$S/N = A + 0.12\,AB + 1.7B$, *ratio*

Albersheim's Multi-pulse Non-coherent Integration formula

$$(S/N)_{input} = -5\log_{10} n + \left(6.2 + \frac{4.54}{\sqrt{n+0.44}}\right) * \log_{10}\left(A + 0.12AB + 1.7B\right)$$

units = dB

Post-detection Integ Efficiency ($n*E_i(n)$)

Calc using Albersheim's formula - POMR (3.17) for P_d =0.8575, P_{fa} = 4.63 e-12

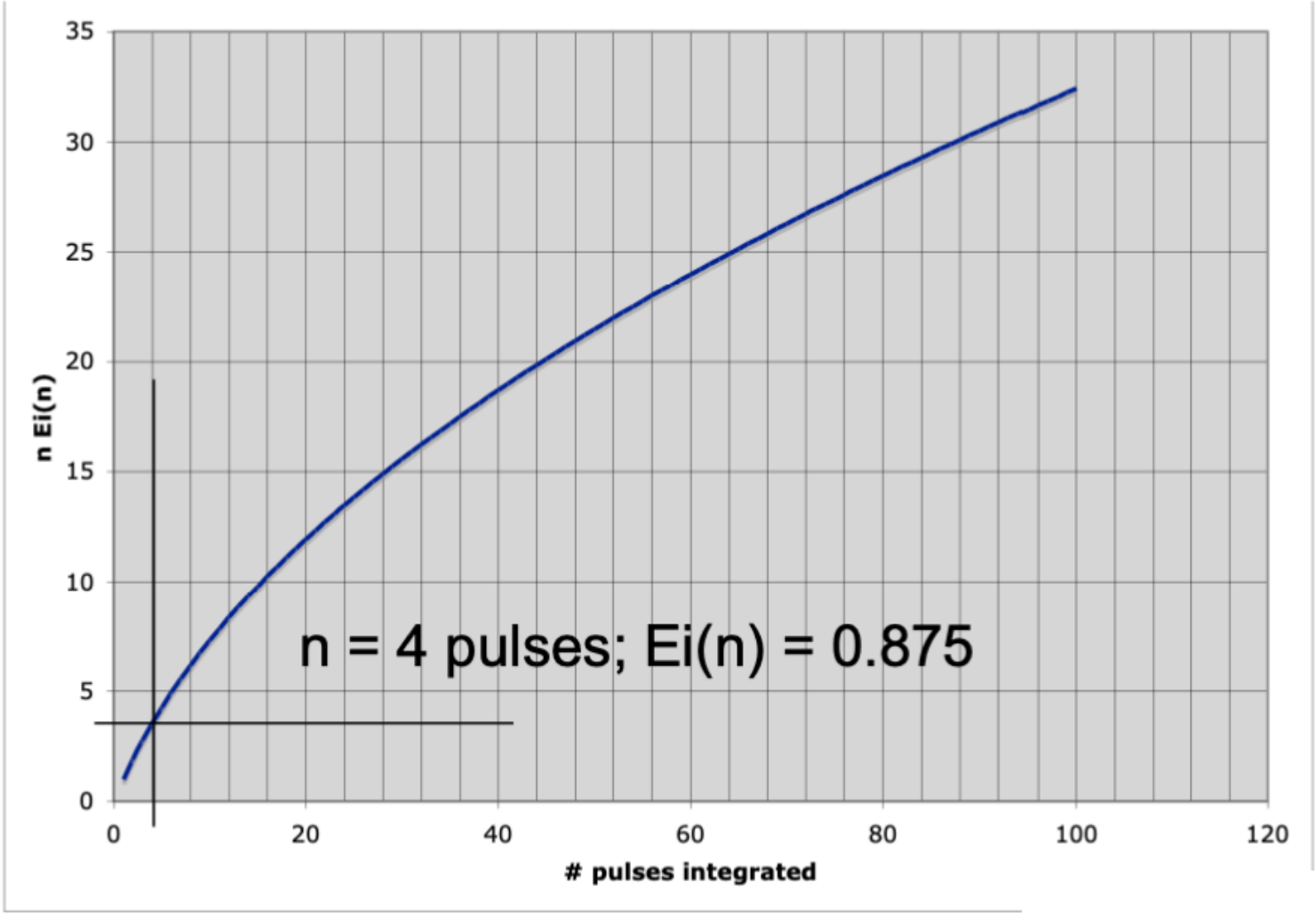

Post-detection Integ Efficiency ($n*E_i(n)$)

Calc using Albersheim's formula - POMR (3.17) for P_d =0.8575, P_{fa} = 4.63 e-12

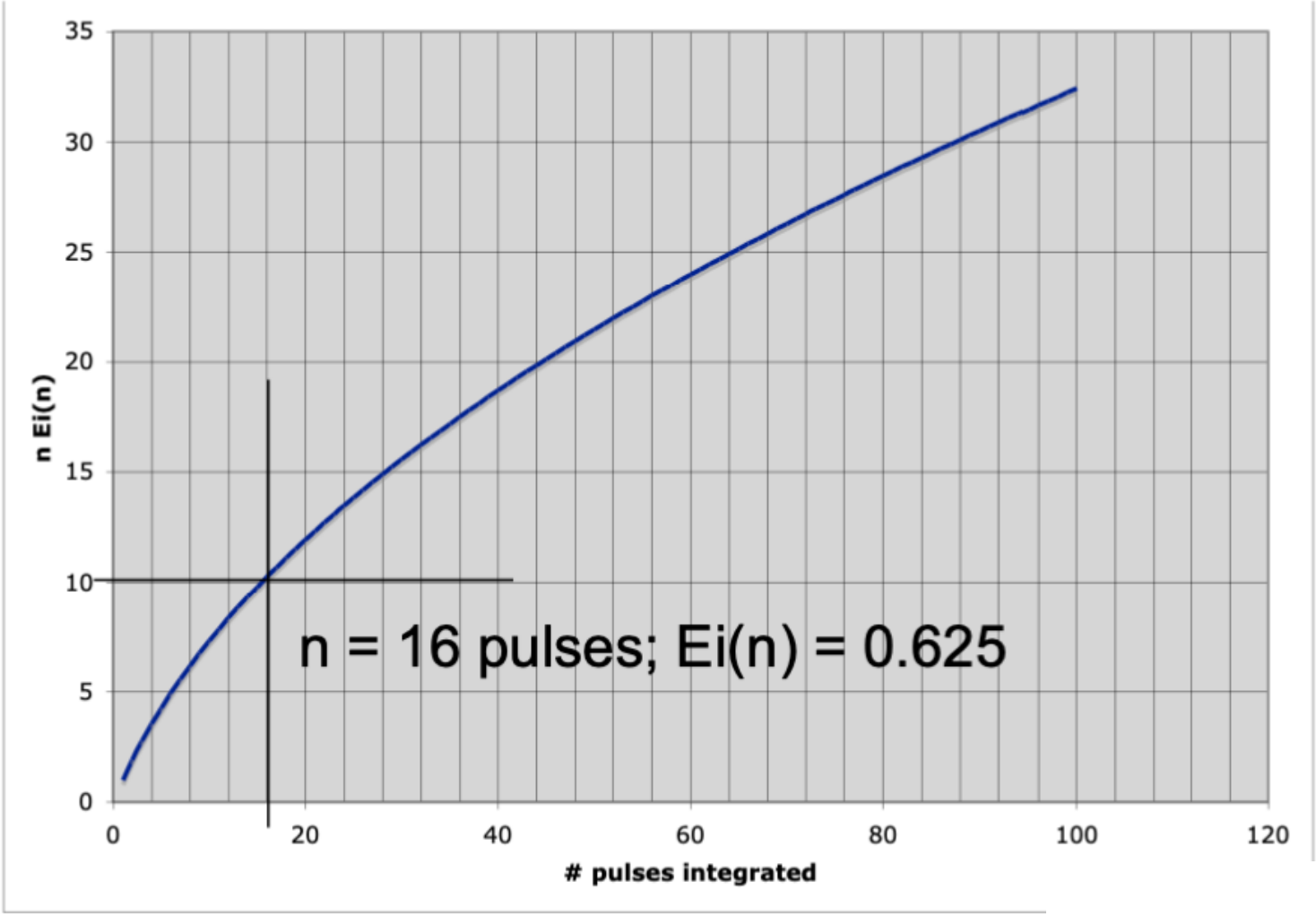

Post-detection Integ Efficiency ($n*E_i(n)$)

Calc using Albersheim's formula - POMR (3.17) for P_d =0.8575, P_{fa} = 4.63 e-12

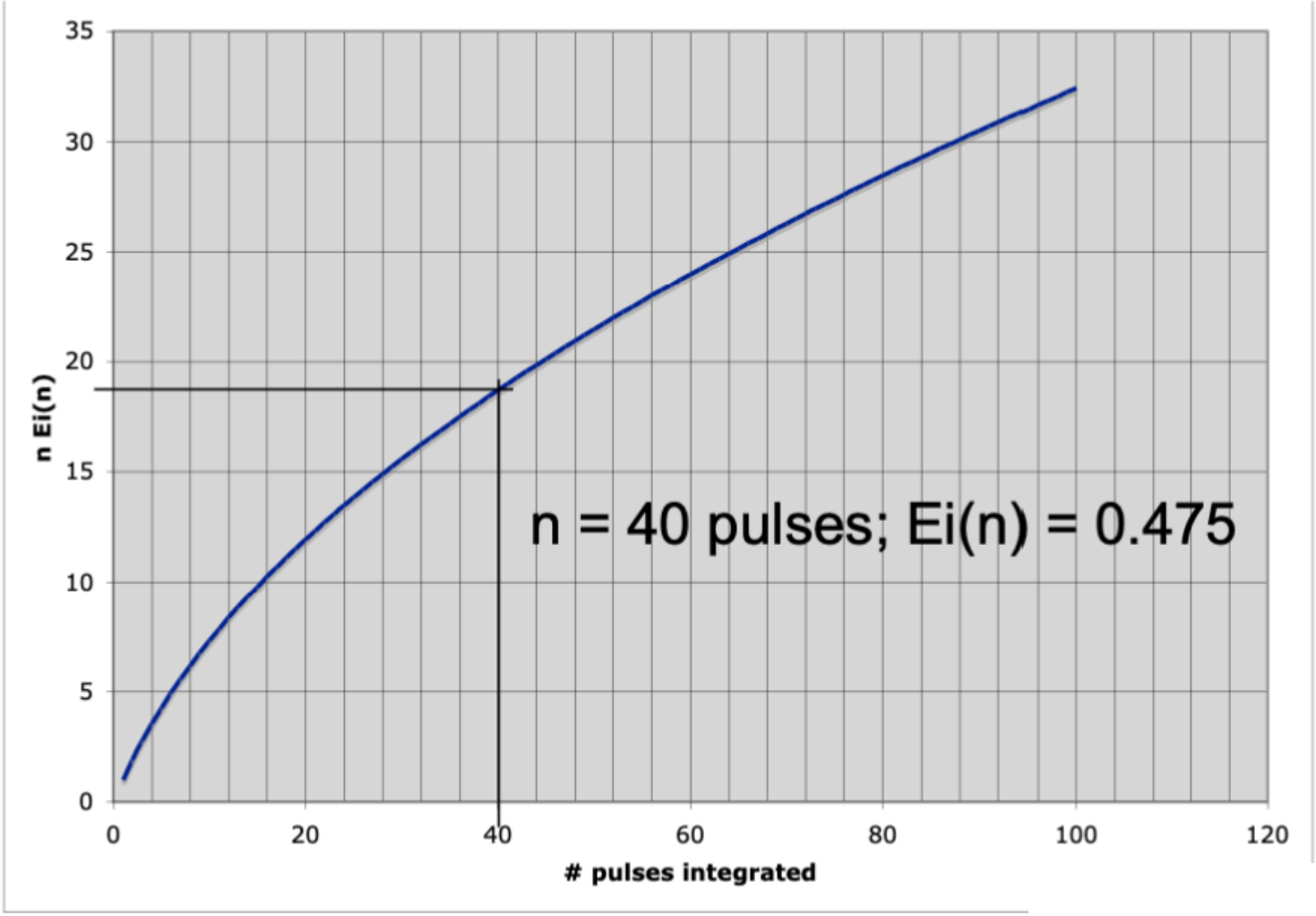

Post-detection Integ Efficiency ($n*E_i(n)$)

Calc using Albersheim's formula - POMR (3.17) for P_d =0.8575, P_{fa} = 4.63 e-12

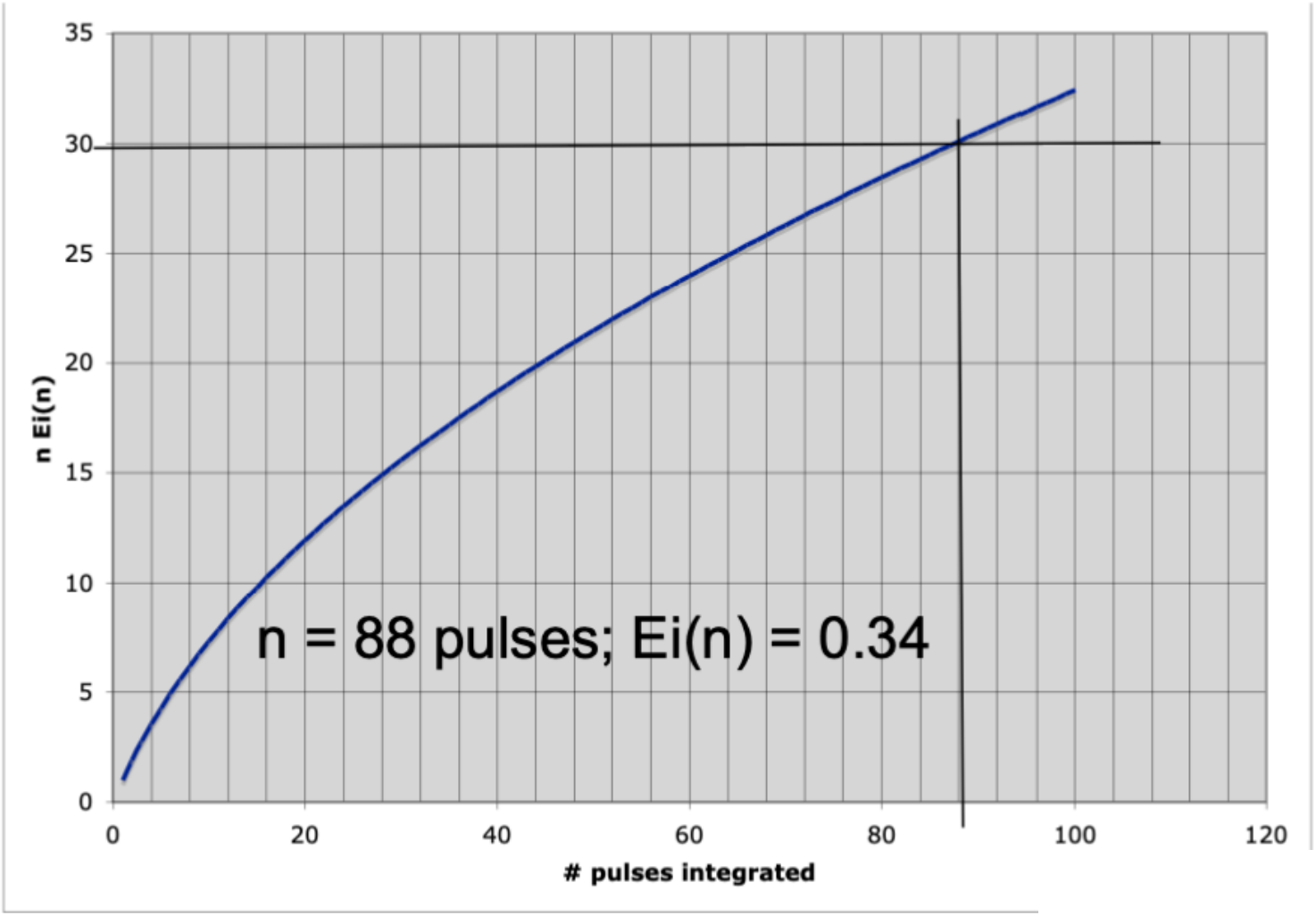

Consider Non-coherent Pulse Integration

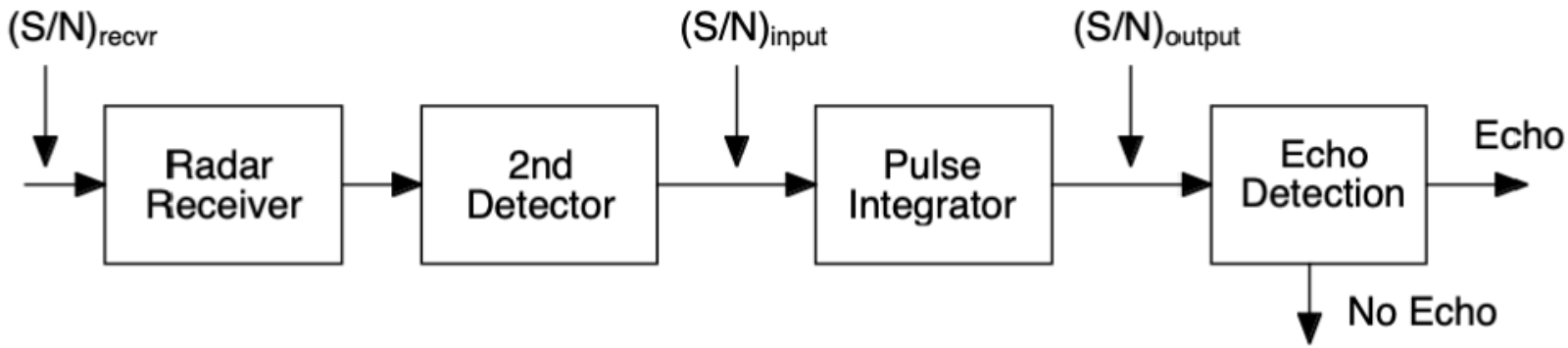

The receiver is linear; so the $(S/N)_{recvr} = (S/N)_{input\ (single_pulse)}$
The output SNR after non-coherent integrating "n" pulses is

$$(S/N)_{non\text{-}coher} = (S/N)_{output} = n*E_i(n)*(S/N)_{input\ (single\ pulse)}$$

Consider Non-coherent Pulse Integration

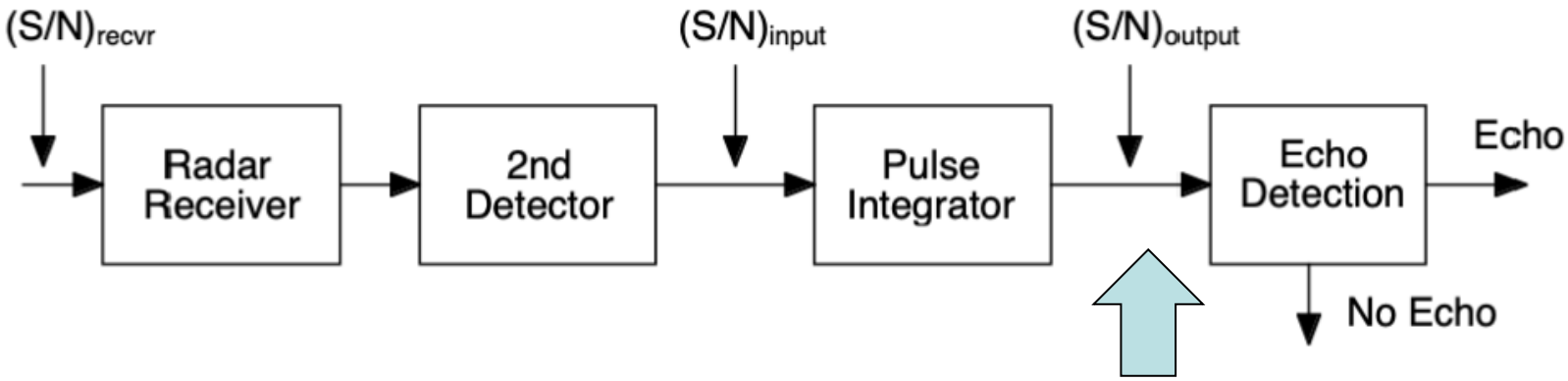

Consider a single pulse:
Albersheim's formula for a single pulse calculates the (S/N) @ the threshold detector input to yield a P_d given a P_{fa}
S/N = A + 0.12AB + 1.7B, pwr ratio

$$A = ln[0.62/P_{fa}] \text{ and } B = ln[P_d/(1-P_d)]$$

This is equal to $(S/N)_{out}$ of the pulse integrator (for one pulse integrated); therefore for this case $E_i(n) = 1.0$

How to Calc the (S/N)out cont.

The output SNR after non-coherent integrating "n" pulses is

$(S/N)_{out} = n*Ei(n)*(S/N)_{input}$

Now after "n" pulses integrated, Albersheim's formula - POMR (3.17) **calculates the $(S/N)_{input}$ *(in dB)* to the pulse integrator** required to yield a desired P_d given a P_{fa}

But the required **$(S/N)_{output}$ is equal to Albersheim's single-pulse formula**

$$S/N = A + 0.12AB + 1.7B$$

$$A = ln[0.62/P_{fa}] \text{ and } B = ln[P_d/(1-P_d)]$$

Therefore, we can solve for $E_i(n) = (S/N)_{out} / [n*(S/N)_{input}]$

Examples from previous exams

Example: Mid-term exam Spr06 Prob-1: Calc Range at which a target can be measured

Given a ground to air surveillance radar and the radar equation: $R^4 = X \text{ sigma} / ((S/N)*kT_{sys}B)$,

where $X = 6.725 \times 10^{+07}$ (78.3 dB); sigma = 2.0 m^2; Bandwidth = 1.667 MHz; Tsys = 282.7 K; <Tfa> = 20 min = 1200 sec

(1) What is the probability of false alarm ?

$$Pfa = 1/(B\langle Tfa\rangle) = 1/(1.67\times10^6 \times 1200) = 5 \times 10^{-5}$$

Example: Mid-term exam Spr06 Prob-1: cont.

(2) What is the signal to noise power ratio (SNR) for a single pulse detection with a probability $P_d = 0.8$, given $P_{fa} = 5x10^{-5}$?

From Albersheim's single pulse equat.

S/N = A + 0.12AB + 1.7B
A = ln(0.62/Pfa) = 20.938
B= ln (Pd/(1-Pd)) = 1.386
S/N = 26.8 => [14.3] dB

Notation: [ ] = dB

Example: Mid-term exam Spr06 Prob-1: cont.

(3) What is the noise power?

$N = k\ Tsys\ B = (1.38\text{x}10^{-23})*282.7*1.667\text{x}10^{6}$

$= 6.50\text{x}10^{-15}$ => [-141.87] dBW

Example: Mid-term exam Spr06 Prob-1 – cont

To achieve the Pd = 0.8, the S/N required for a single pulse is given by Albersheim's eq: S/N = 26.8 (see part-2)

@ what range can we detect the target?

$$R^4 = \frac{X\sigma}{\left(\frac{S}{N}\right)N}$$

R = 166,711.4 m = 166.7 km

Example: Mid-term exam Spr06 Prob-2

Consider a pulse radar with pulse integration using the following block diagram. The detection threshold voltage is selected to give a probability of false alarm $Pfa = 1.0 \times 10^{-6}$. Assume that the *X-factor* = 50.0 dB, the system noise at the input to the receiver N = - 145.0 dBW, and the target cross section $\sigma = 4\ m^2$.

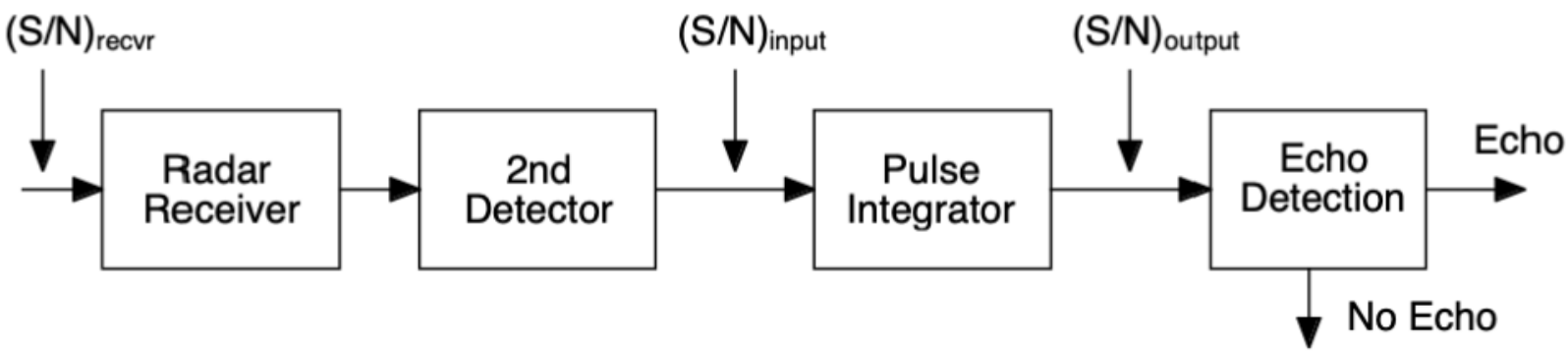

Example: Mid-term exam Spr06 Prob-2 – cont.

The following questions pertain to this hardware configuration.

(1) Given the above pulse integrator, what is the required SNR per pulse [$(S/N)_{input}$] when there are 9 pulses integrated for a prob. of detection = 0.5?

A = ln(0.62/Pfa)
B= ln (Pd/(1-Pd))

A-factor	13.34
B-factor	0

$$(S/N)_{input} = -5\log_{10} n + \left(6.2 + \frac{4.54}{\sqrt{n+0.44}}\right) * \log_{10}\left(A + 0.12AB + 1.7B\right) \text{ , dB}$$

(SNR)input	2.436	3.87 dB

Example: Mid-term exam Spr06 Prob-2 – cont.

The following questions pertain to this hardware configuration.

(2) What is the (S/N)output of the pulse integrator?

Answer:
By integrating 9 pulses with a $(S/N)_{input}$ = 3.87 dB => 2.436 ratio, we can achieve a Pd = 0.5 for a Pfa = 1.0 E-06.

This is (S/N)output = Albersheim's single-pulse equation
= A + 0.12AB +1.7B, power ratio
From part-1: A = 13.34 and B = 0, so
(S/N)output = 13.34 => [11.25] dB

Example: Mid-term exam Spr06 Prob-2 – cont.

The following questions pertain to this hardware configuration.

(2) What is the (S/N)output of the pulse integrator?

Answer:
By integrating 9 pulses with a $(S/N)_{input}$ = 3.87 dB => 2.436 ratio, we can achieve a Pd = 0.5 for a Pfa = 1.0 E-06.

This is (S/N)output = Albersheim's single-pulse equation
= A + 0.12AB +1.7B, power ratio
From part-1: A = 13.34 and B = 0, so
(S/N)output = 13.34 => [11.25] dB

Calc $E_i(n)$ = (S/N)output/ (n* (S/N)input)
= 13.34 / (9*2.436) = 0.6084

Example: Mid-term exam Spr06 Prob-2 – cont.

The following questions pertain to this hardware configuration.

(3) What is the range (m) that the target can be detected after integrating 9 pulses with the SNR given in part-(1) ?
From the statement of the problem, target sigma = 4.0 m^2
From part-(1), we know the (S/N)input = 2.436
X = 10^(50/10) = 1 E+05

Calc the noise power = $kT_{sys}B$:
N = 10^(-145.0/10) = 3.16 E-15

$R^4 = X\ sigma\ /((S/N)*kT_{sys}B) = 5.193\ E+19$

R = 84,888 m

Algorithm to solve for P_d given P_{fa} , # pulses and $(S/N)_{single\ pulse}$

Using Albersheims eq 15.66
See POMR p-576 & 577

Prob of Detection Algorithm

Solve for the prob. of detection (P_d)

Given: prob of false alarm (P_{fa}) and integration of "n" pulses (post-detection)

- Procedure
  1. Calculate the SNR for a single pulse using the radar equation.
  2. Calculate the number of pulses on target.
  3. Given the P_{fa}, solve Albersheim equat. (3.17) for P_d

Pulses on Target for Scanning Radar Antenna

Time Sequence of Scanning Radar (Top View

Target 1st enters the antenna beam

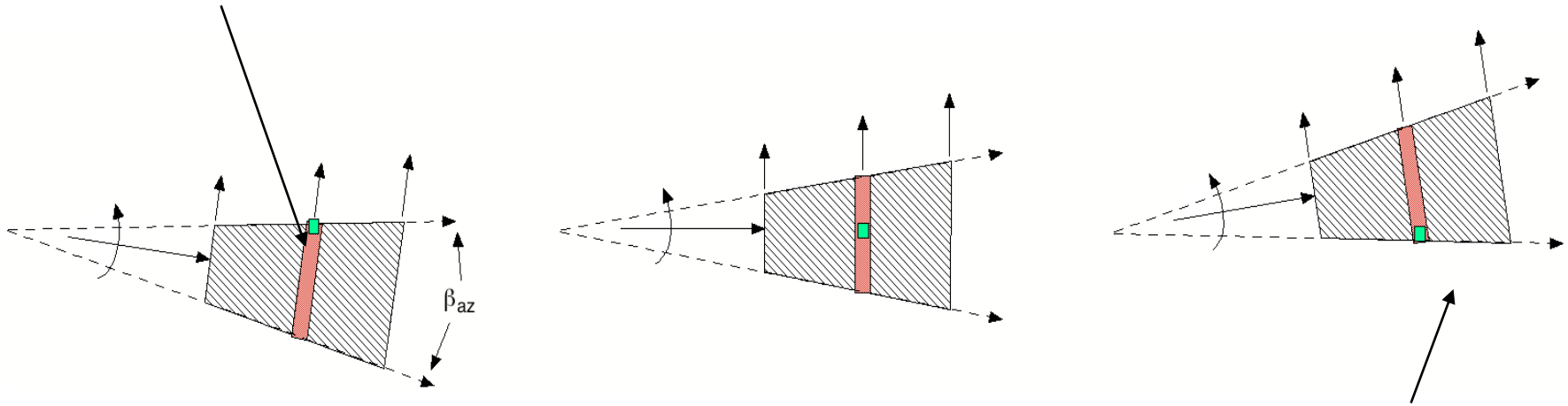

Target exits the antenna beam

Time: $t = t_o$

Time: $t = t_1$

Time: $t = t_2$

Time-on-target: $TOT = t_2 - t_o$

Pulses-on-Target (*POT*)

- Calculate the TOT:

$$TOT = \left(\frac{60}{Spin_rate}\right) * \left(\frac{\beta_{az}(\deg)}{360^{o}}\right)$$

Where (spin_rate) is revolutions/min and 60/(spin_rate) = spin period in sec; β_{az} is Ant Az HPBW, deg and $\beta_{az}/360^{\circ}$ = *fraction of one-revolution*

- Pulses on Target:

$$POT = PRF * TOT$$

POT Constraints

- POT depends upon the PRF and the TOT
  - TOT on target depends upon:
    - Antenna spin rate
    - Antenna pattern azimuth beamwidth
  - PRF depends upon:
    - To have only one pulse within the ant footprint at any time
    - Or unambiguous range measurements

Non-coherent Integration Improvement Empirical Formula: POMR (3.17), Skolnik (2.35)

$$\left(SNR(dB)\right)_{input} = -5\log_{10} n + \left(6.2 + \frac{4.54}{\sqrt{n+0.44}}\right) * \log_{10}\left(A + 0.12AB + 1.7B\right)$$

$$\left(SNR(dB)\right)_{input} = 10 * \log_{10}(1/\sqrt{n}) + 10 * \log_{10}\left\{\left(A + 0.12AB + 1.7B\right)^{0.1*\left(6.2+\frac{4.54}{\sqrt{n+0.44}}\right)}\right\}$$

Convert this equation from dB to ratio

Non-coherent Integration Improvement Empirical Formula: POMR (3.17), Skolnik (2.35)

$$\left(SNR(dB)\right)_{input} = -5\log_{10} n + \left(6.2 + \frac{4.54}{\sqrt{n+0.44}}\right) * \log_{10}\left(A + 0.12AB + 1.7B\right)$$

$$\left(SNR(dB)\right)_{input} = 10 * \log_{10}(1/\sqrt{n}) + 10 * \log_{10}\left\{\left(A + 0.12AB + 1.7B\right)^{0.1*\left(6.2+\frac{4.54}{\sqrt{n+0.44}}\right)}\right\}$$

Take the inverse $\log_{10}$

$$\left(SNR(ratio)\right)_{input} = (1/\sqrt{n}) * \left(A + 0.12AB + 1.7B\right)^{\left(0.62+\frac{0.454}{\sqrt{n+0.44}}\right)}$$

$$\left(SNR(ratio)\right)_{input} * \sqrt{n} = \left(A + 0.12AB + 1.7B\right)^{\left(0.62 + \frac{0.454}{\sqrt{n}+0.44}\right)}$$

$$\left(\left(SNR(ratio)\right)_{input} * \sqrt{n}\right)^{\varepsilon} = \left(A + 0.12AB + 1.7B\right)$$

$$\varepsilon = \frac{1}{\left(0.62 + \frac{0.454}{\sqrt{n}+0.44}\right)}$$

Solve for B, which is proportional to P_d

$$B = \frac{\left(\left(SNR(ratio)\right)_{input} * \sqrt{n}\right)^{\varepsilon} - A}{\left(0.12A + 1.7\right)}$$

Prob of Detection Algorithm

Equations:

$$\beta = (\chi - A) / (0.12 \ A + 1.7) \qquad (4)$$

– where

$$A = \ln [\, 0.62 / P_{fa} \,]$$

$$\chi = [\, (S/N) \ \ sqrt(n) \,]^{\varepsilon}$$

Where (S/N) is single pulse SNR expressed as a power ratio
"n" is number of pulses

Prob of Detection Algorithm

Equations:

$$\beta = (\chi - A) / (0.12\ A + 1.7) \qquad (4)$$

– where

$$A = \ln [\, 0.62 / P_{fa} \,]$$

$$\chi = [\, (S/N)\ \ sqrt(n) \,]^{\varepsilon}$$

Where (S/N) is single pulse SNR expressed as a power ratio
"n" is number of pulses

$$\varepsilon = 1 / \{0.62 + 0.454 / [sqrt(\, n + 0.44 \,)]\}$$

$$P_d = (e^{\beta}) / [\, 1 + e^{\beta} \,] \qquad (5)$$

Note: this is different than POMR eq (3.17), but both give the same result

Example

- Single-pulse SNR (power ratio) from radar equation is: S/N = 2.61
- $P_{fa} = 1.460 \times 10^{-08}$
- # pulses post-det integ:

  n = 15
- A = 17.5642
- $\varepsilon = 1.3595$
- $\chi = 23.2229$
- $\beta = 1.4861$
- $P_d = 0.8155$

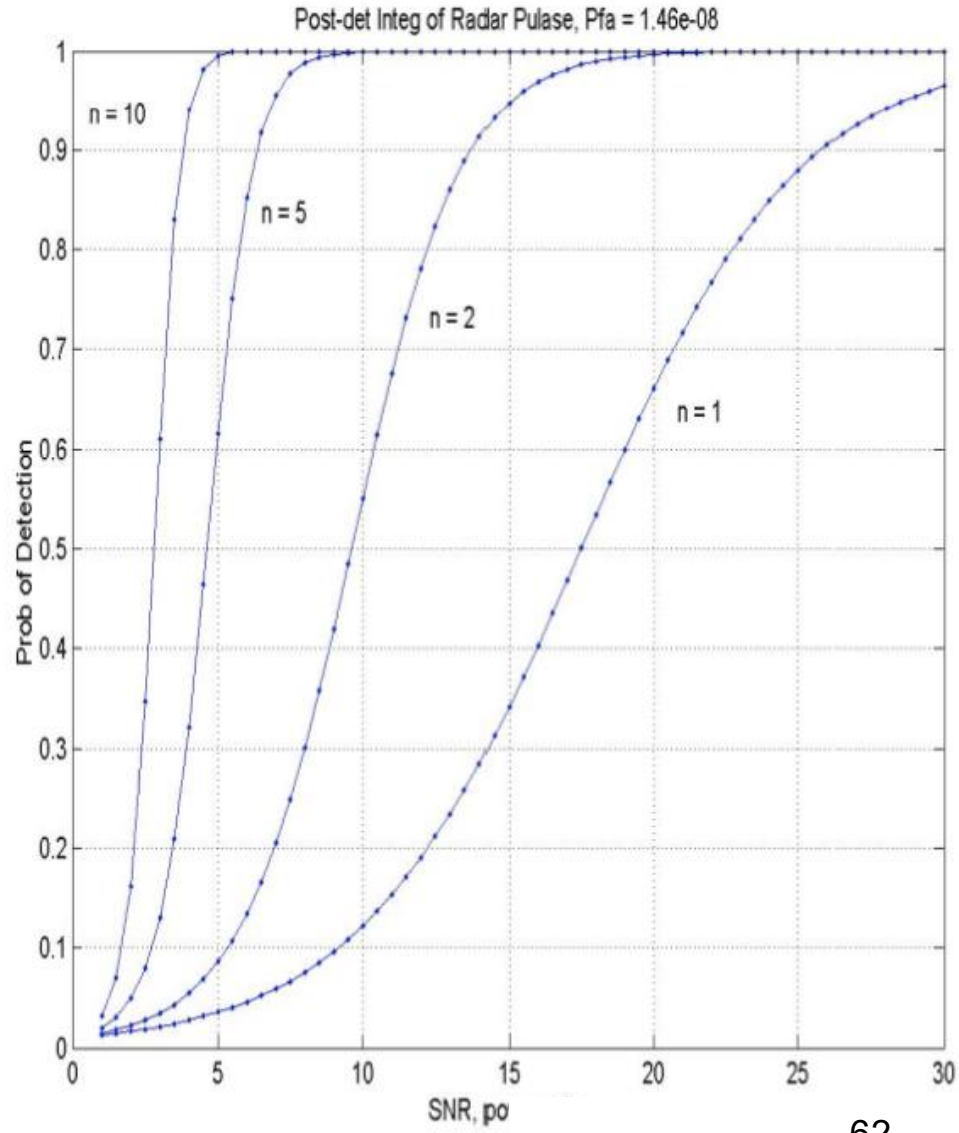

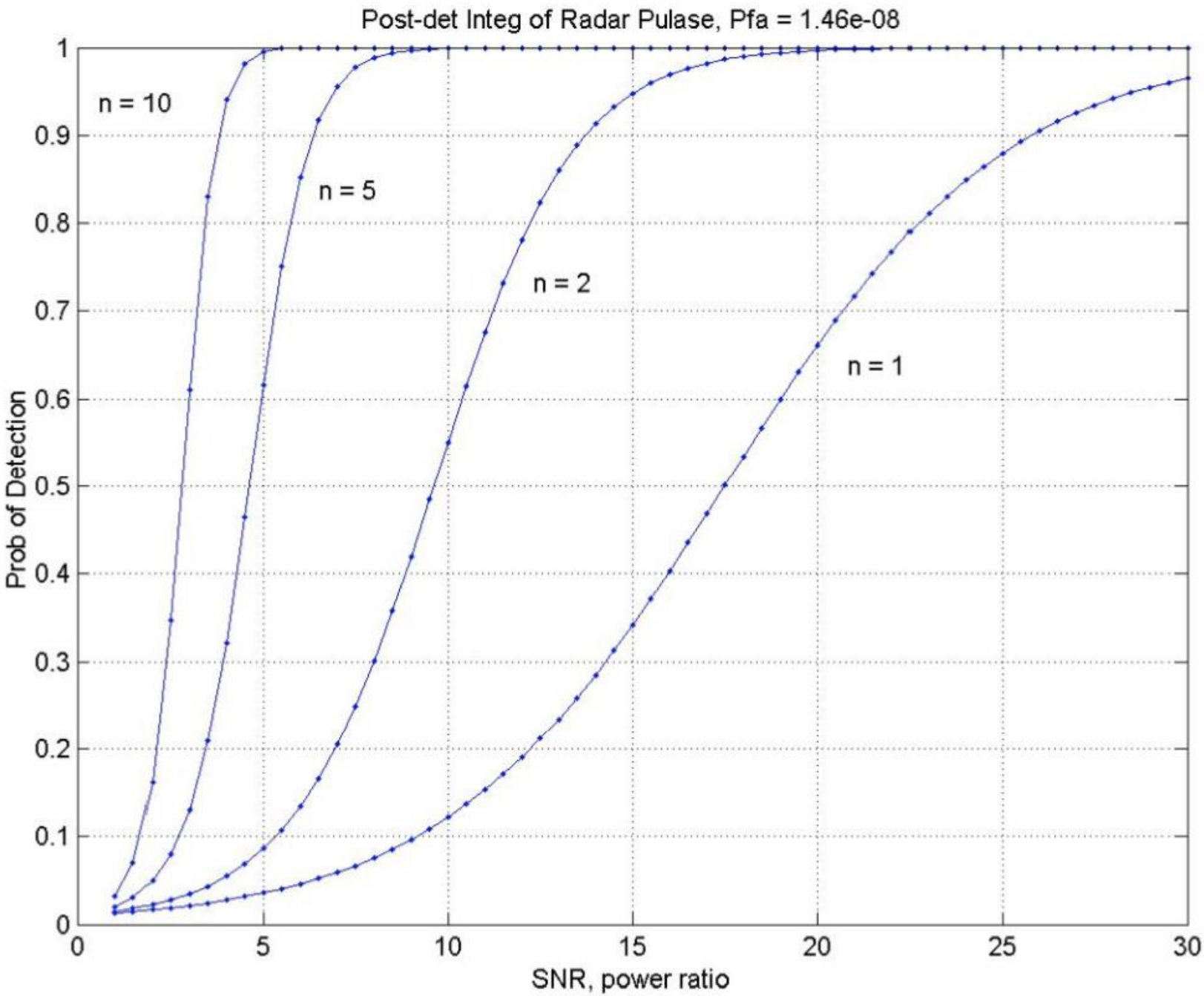
Post-det Integ of Radar Pulase, Pfa = 1.46e-08
n = 10
n = 5
n = 2
n = 1
Prob of Detection
SNR, power ratio
0
0.1
0.2
0.3
0.4
0.5
0.6
0.7
0.8
0.9
1
0
5
10
15
20
25
30

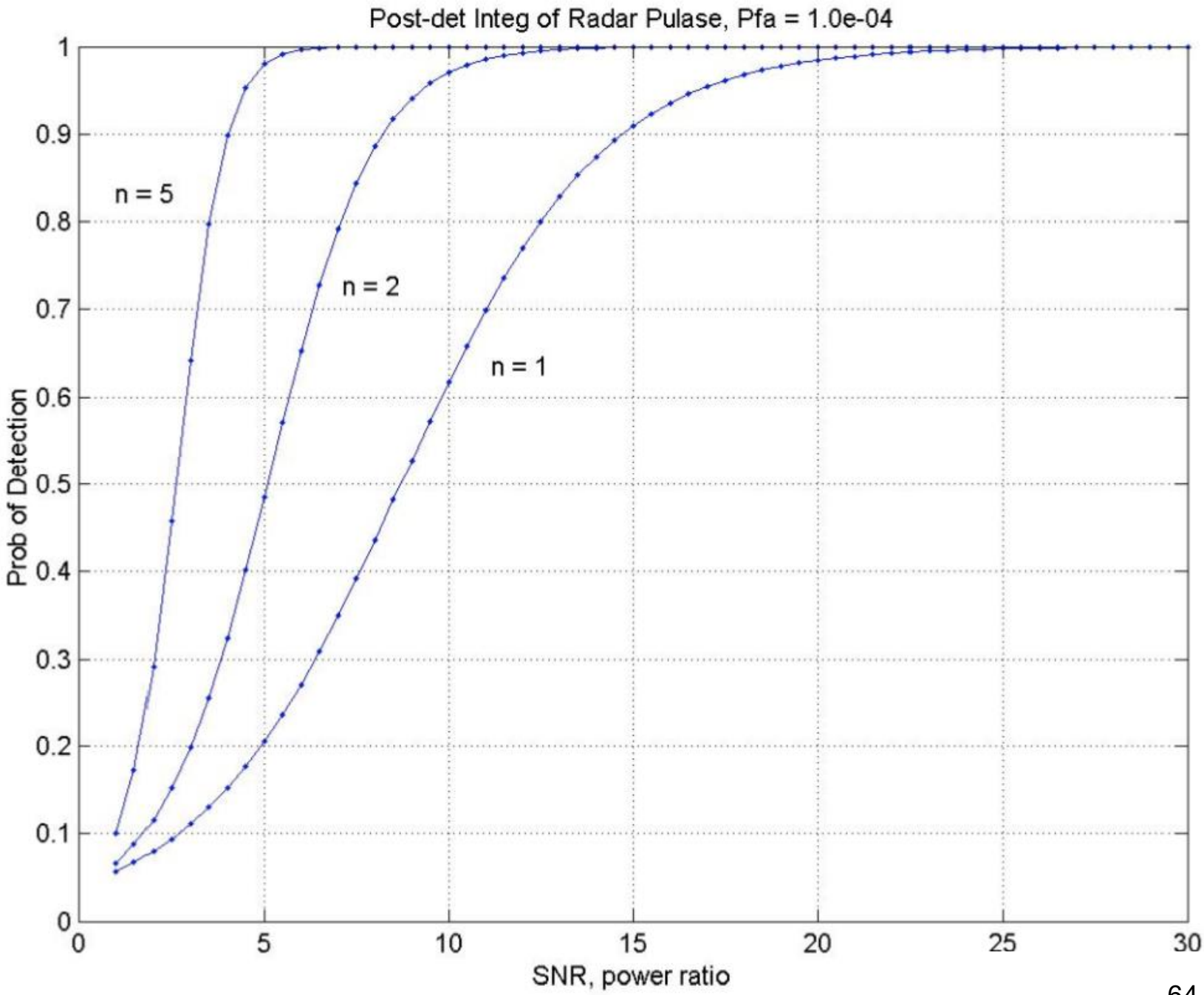
Post-det Integ of Radar Pulase, Pfa = 1.0e-04
Prob of Detection
SNR, power ratio
n = 5
n = 2
n = 1
0
0.1
0.2
0.3
0.4
0.5
0.6
0.7
0.8
0.9
1
0
5
10
15
20
25
30

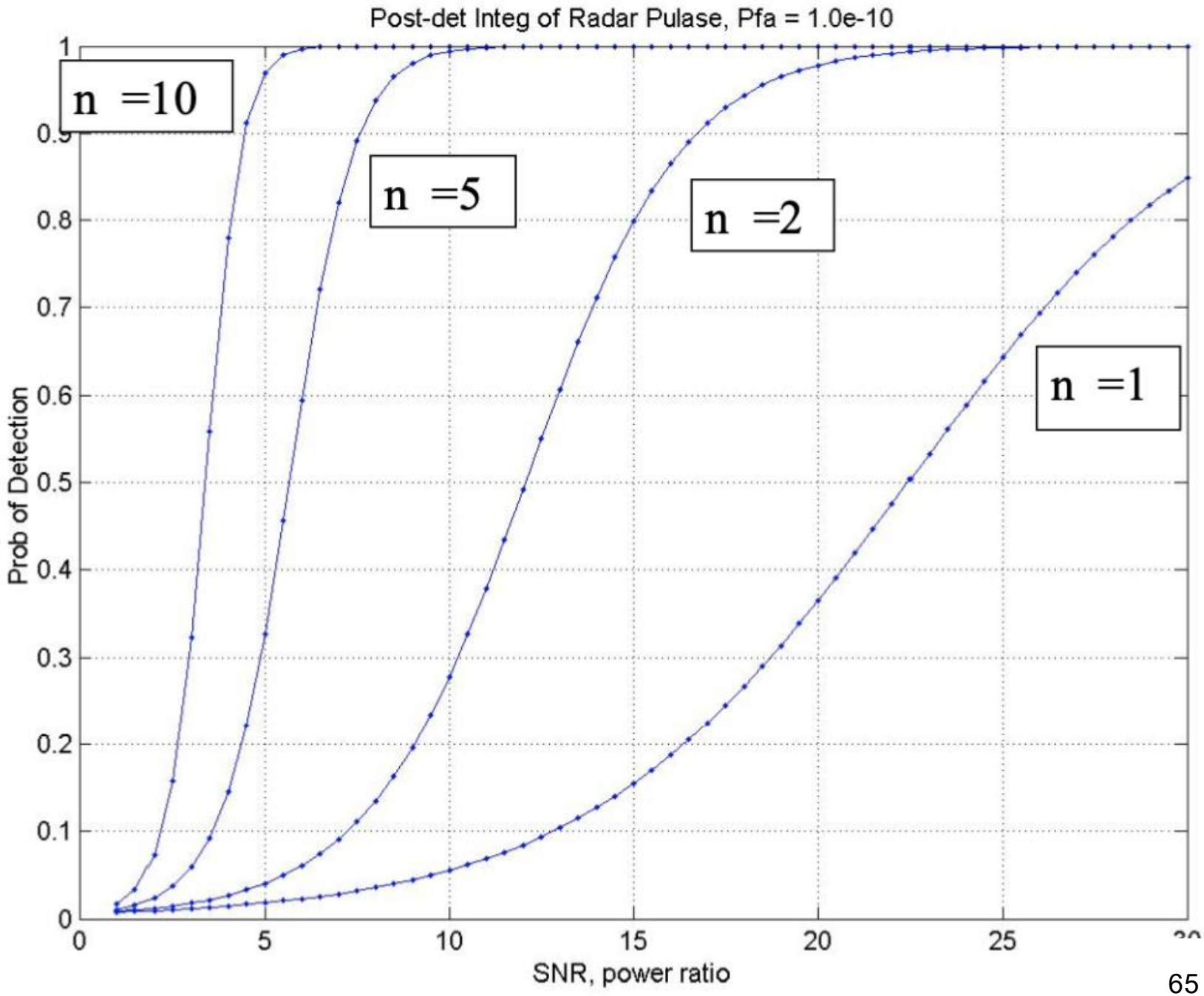
Post-det Integ of Radar Pulase, Pfa = 1.0e-10
n =10
n =5
n =2
n =1
Prob of Detection
SNR, power ratio
0
0.1
0.2
0.3
0.4
0.5
0.6
0.7
0.8
0.9
1
0
5
10
15
20
25
30

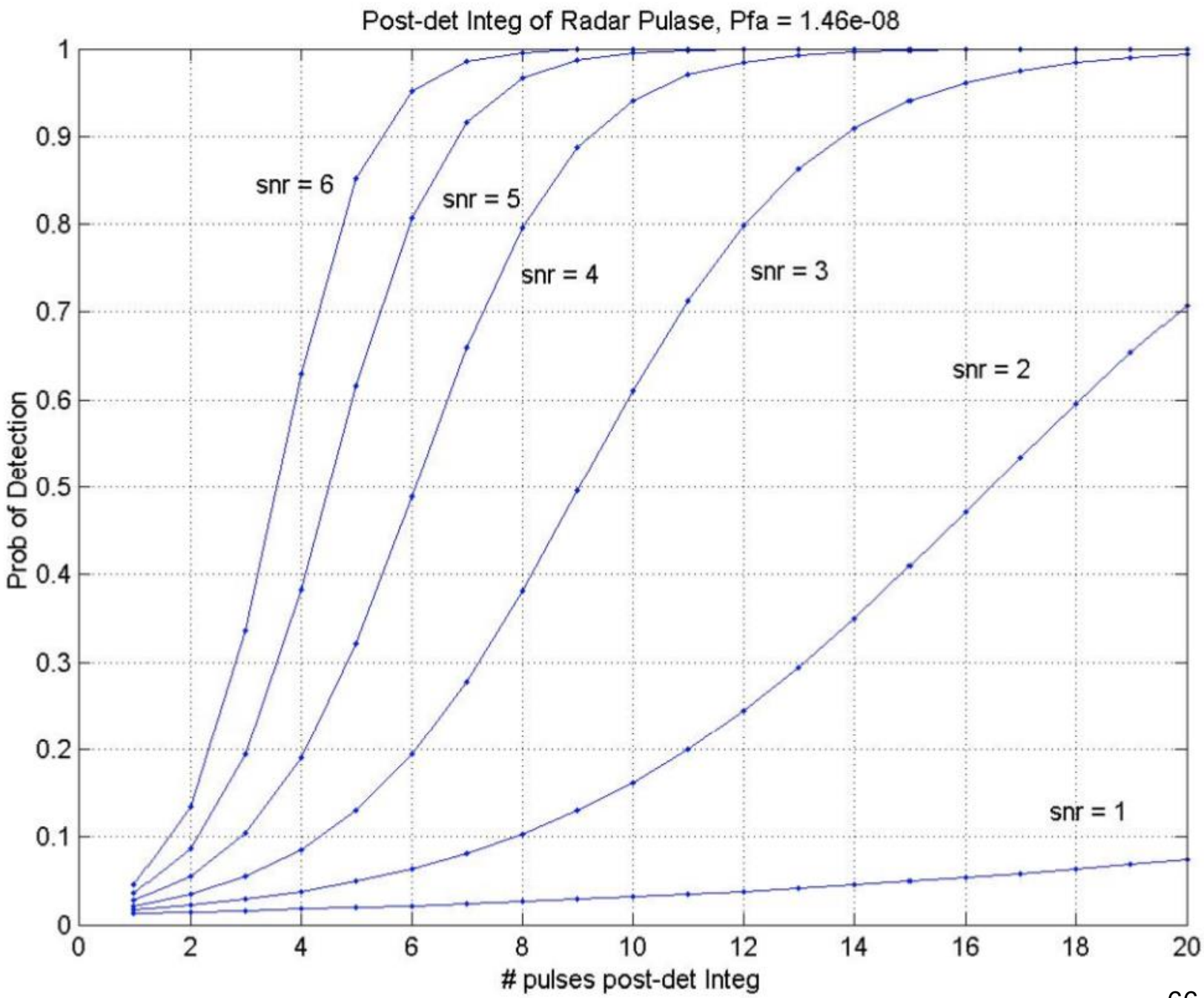
Post-det Integ of Radar Pulase, Pfa = 1.46e-08
Prob of Detection
# pulses post-det Integ
snr = 6
snr = 5
snr = 4
snr = 3
snr = 2
snr = 1
0
0.1
0.2
0.3
0.4
0.5
0.6
0.7
0.8
0.9
1
0
2
4
6
8
10
12
14
16
18
20

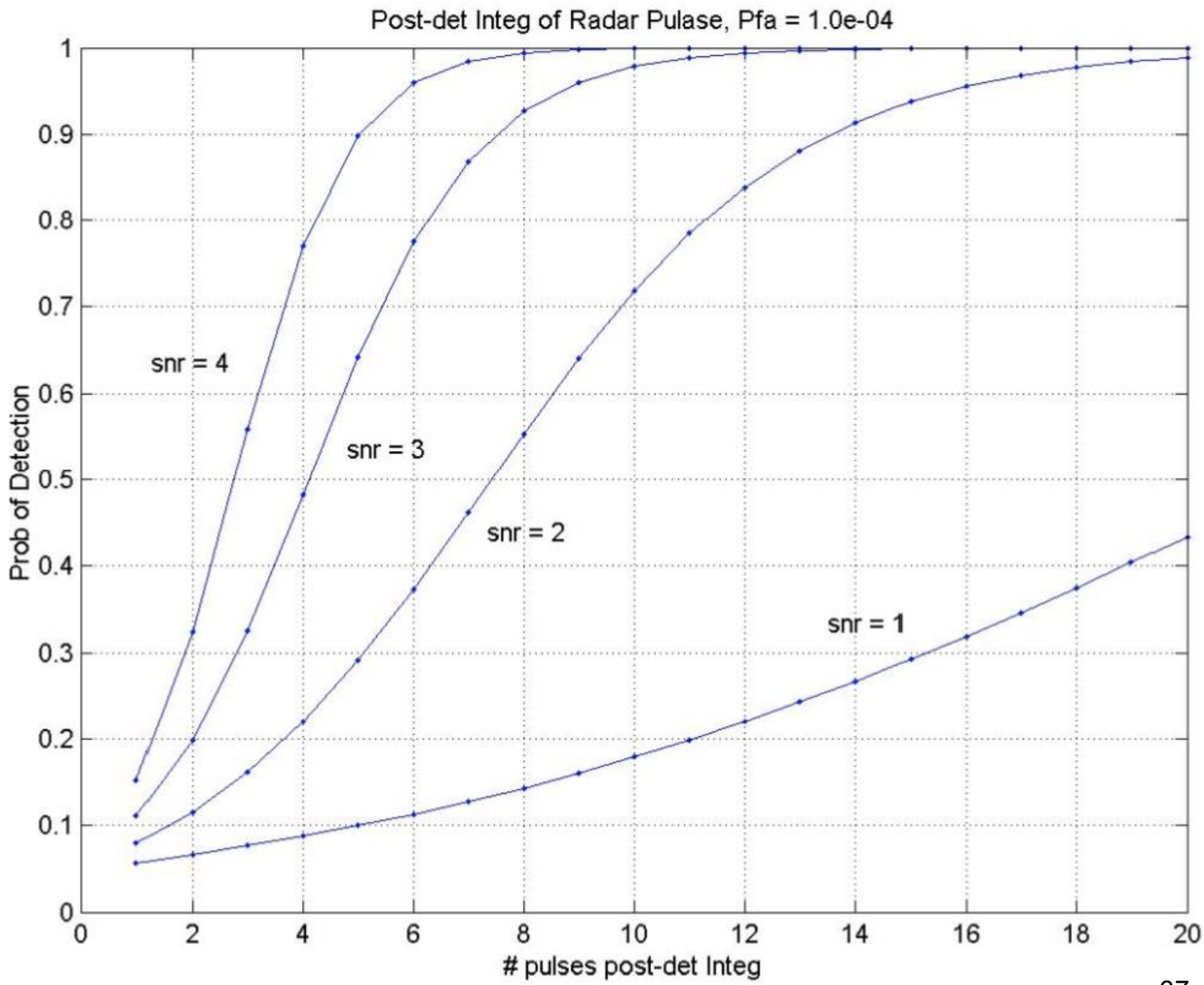
Post-det Integ of Radar Pulase, Pfa = 1.0e-04
Prob of Detection
# pulses post-det Integ
snr = 4
snr = 3
snr = 2
snr = 1
0
0.1
0.2
0.3
0.4
0.5
0.6
0.7
0.8
0.9
1
0
2
4
6
8
10
12
14
16
18
20

Example: Mid-term exam Spr06 Prob-2 cont Non-coherent Integration

(5) Given the single pulse $(S/N)_{recvr}$ = 2.49 dB, 18 pulses integrated, and P_{fa} = 1.0 E-06, what is the prob of detection, P_d = ?

Pd Algorithm	linear	dB
Probability of False Alarm	1.00E-06	
# pulses integrated, n	18	
S/N pwr ratio	1.774	2.49
ε=expon = {0.62 + 0.454/ [sqrt(n+0.44)]}$^{-1}$	1.37793	
A-factor = =LN(0.62/Pfa)	13.337	
χ-factor "base" = [(s/N)*sqrt(n)]	7.527	
χ = POWER(base,expon)	16.142	
$\beta = (\chi - A)/(0.12A + 1.7)$	0.8496	
Pd = $e^{\beta} / (1 + e^{\beta})$	0.700	

Summary

- For non-coherent pulse integration, the P_d will improve with:
  - output SNR of the pulse integrator, which depends upon
    - the # pulses integrated
    - $(S/N)_{input}$ for a single pulse
    - Reducing the threshold voltage, which raises the P_{fa}
- The use of laptops for exams is permitted, so I recommend preprogramming:
  - Albersheims equations
    - for single pulse and multiple pulse integration
  - The P_d algorithm given in this lecture

Next Time
Multiple-dwell Pd